# Air-to-Air Missile Testing Using Advanced Distributed Simulation

**By Dr. LarryMcKee**
**Science Applications International Corporation, JADS JTF, Albuquerque, New Mexico**

## BACKGROUND

The Joint Advanced Distributed Simulation Joint Test and Evaluation (JADS JT&E) was chartered by the Deputy Director, Test, Systems Engineering and Evaluation (Test and Evaluation), Office of the Under Secretary of Defense (Acquisition and Technology) in October 1994 to investigate the utility of Advanced Distributed Simulation (ADS) technologies for support of Developmental Test and Evaluation (DT&E) and Operational Test and Evaluation (OT&E). The program is Air Force led, with Army and Navy participation, and is nominally scheduled for five years.

The JADS JT&E is tasked in three areas:

- Investigate the present utility of ADS for T&E.
- Identify the critical constraints, concerns, and methodologies when using ADS for T&E.
- Identify the requirements that must be introduced into ADS systems if they are to support a more complete T&E capability in the future.

The JADS JT&E is executing its charter by evaluating the application of ADS to the T&E of representative military systems. The types of systems selected represent three slices of the T&E spectrum: a System Integration Test (SIT) which explores ADS support of air-to-air missile testing, an End-To-End (ETE) test which explores ADS support for Command, Control, Communications, Computers, and Intelligence (C4I) testing, and an Electronic Warfare (EW) test which explores ADS support for EW testing. The JTF will broaden the conclusions developed in the three dedicated test areas by leveraging off of ADS activities sponsored and conducted by other agencies.

The SIT consists of two phases. The first phase, the Linked Simulators Phase (LSP), has been completed and employed an all-simulator architecture for testing an AIM-9 Sidewinder missile. The second phase is now underway and links live shooter and target aircraft to an AIM-120 AMRAAM hardware-in-the-loop (HWIL) simulation at Eglin AFB.

## LSP OVERVIEW

The LSP was executed by the JADS Joint Test Force (JTF) and the Naval Air Warfare Center, Weapons Division (NAWCWPNS) between August and November 1996. The SIT missions simulate a single shooter aircraft launching an air-to-air missile against a single target aircraft. The scenario utilized in the LSP missions was taken from previous AIM-9M testing and is shown in Figure 1. This scenario was replicated during LSP testing.

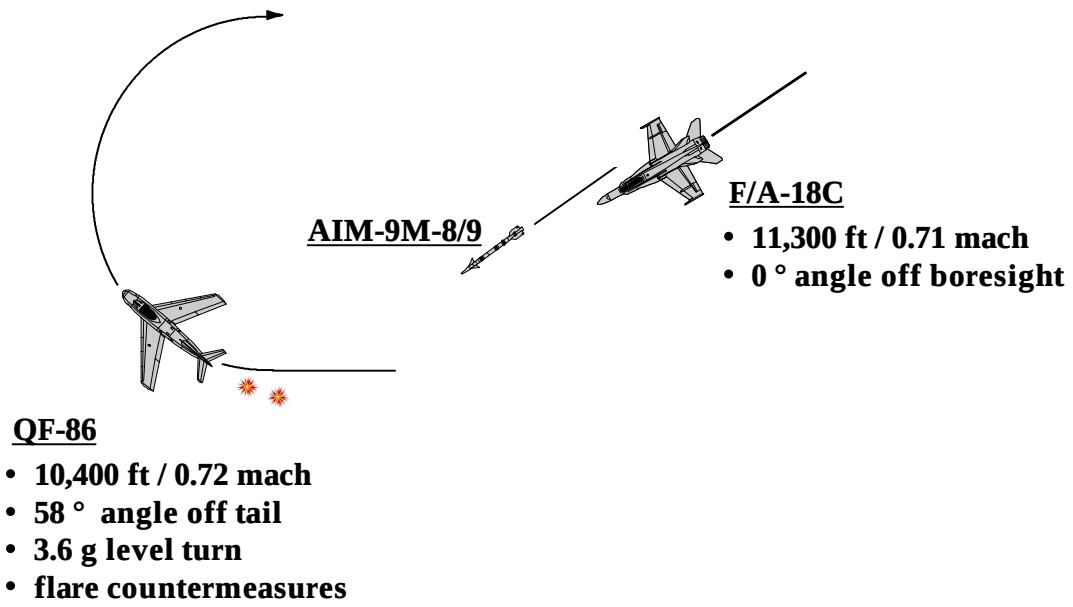


**Figure 1. AIM-9M-8/9 Live Fire Profile (LPN-15, 9 June 93)**

In the LSP, the shooter, target, and missile were all represented by simulators. ADS techniques were used to link NAWCWPNS manned flight laboratories representing the aircraft to an air-to-air missile hardware-in-the-loop (HWIL) laboratory representing the missile. The LSP test configuration is shown in Figure 2. The F/A-18 Weapon System Support Facility (WSSF) at China Lake and the F-14D Weapon System Integration Center (WSIC) at Point Mugu were the shooter and target, respectively. These laboratories were linked to each other and to an AIM-9M-8/9 HWIL laboratory at the Simulation Laboratory (SIMLAB) at China Lake. Interfacing of the laboratories to the network was by means of network interface units (NIUs). The launch aircraft laboratory "fired" the AIM-9 in the SIMLAB at the simulated target aircraft, and the AIM-9 seeker responded to infrared (IR) sources in the SIMLAB which simulated the IR signatures and relative motions of the target aircraft and the flare countermeasures. Real-time links between the laboratories allowed the players to respond to each other.

The nodes exchanged entity state information with each other by means of Distributed Interactive Simulation protocol data units (DIS PDUs). However, the Stores Management System (SMS) data exchange between the F/A-18 WSSF and the AIM-9 SIMLAB used the tactical MIL-STD-1553 protocol, because no suitable DIS protocol exists for these data, because this exchange was only between the WSSF and the SIMLAB, and because use of the tactical protocol was appropriate for integrated weapon system testing.

The test runs were controlled by either the Battle Management Interoperability Center (BMIC) at Point Mugu or the Test Control and Analysis Center (TCAC) in Albuquerque. The control center ensured that all nodes were ready for each run and issued the commands to start and stop the runs. PDUs were processed at the control center to provide JADS test controllers and analysts with real-time stealth node viewing of the simulated engagement.

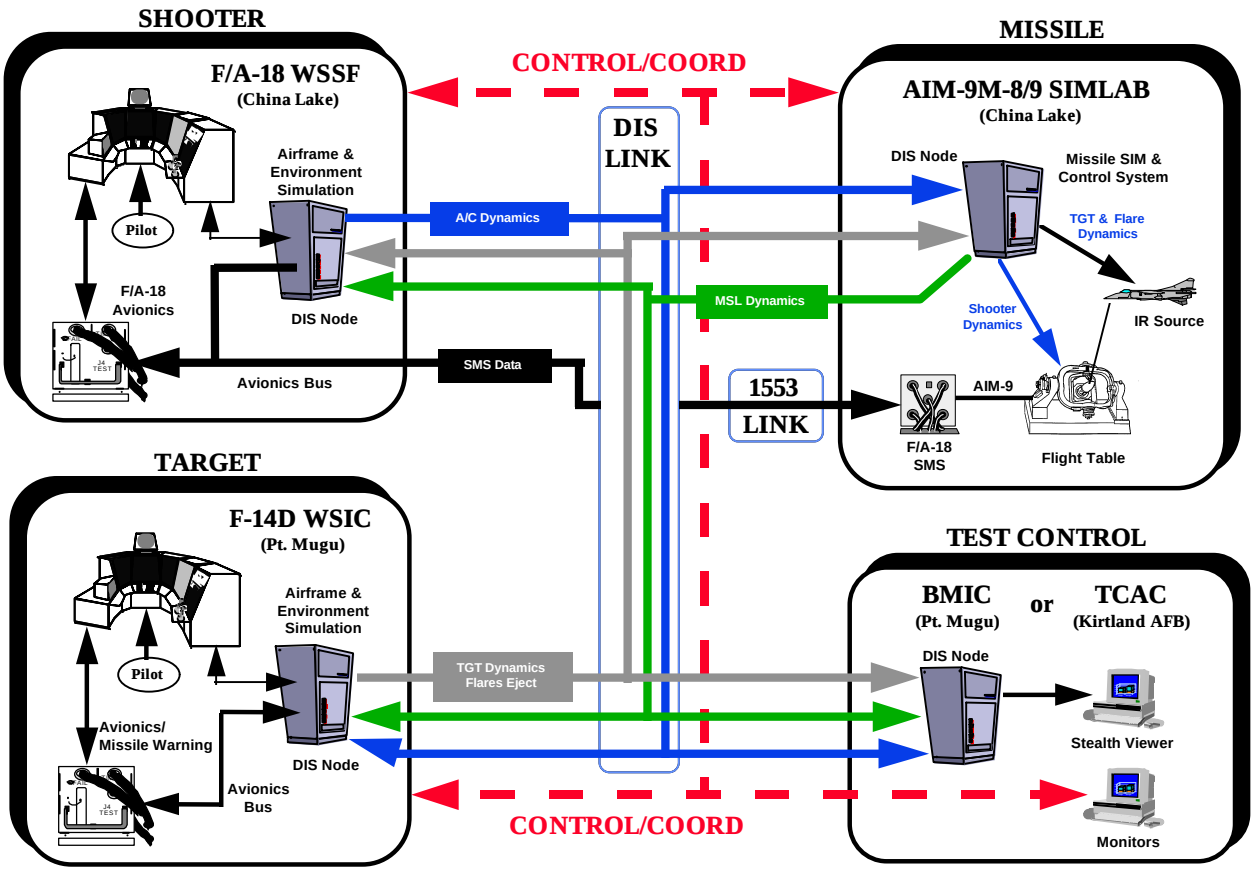


**Figure 2. Linked Simulators Phase Test Configuration**

## LSP TEST PLAN

The LSP was designed to examine the relationships between network performance, system under test (i.e., AIM-9) data, and test measures of interest. The test objectives were:

Objective 1: Assess the validity of AIM-9 data obtained in the LSP ADS configuration
Objective 2: Assess utility of LSP ADS configuration for parametric studies
Objective 3: Assess effect of latency on validity of test results
Objective 4: Assess ability of LSP ADS configuration to support AIM-9 testing
(This test objective was broken into subobjectives as follows.)
Subobjective 4-1: Assess capability of network to provide required bandwidth and connectivity
Subobjective 4-2: Assess the effects of ADS-induced errors on LSP test results validity
Subobjective 4-3: Assess adequacy of standard data protocols for LSP test
Subobjective 4-4: Assess reliability, availability, and maintainability of ADS network
Subobjective 4-5: Assess capability for centralized test control and monitoring

Three formal testing periods, or missions, were planned.

V&V Mission: the objective was to validate the performance of the LSP ADS configuration by replicating the live test engagement (Fig. 1) and comparing results from the LSP to results from the live test.

Parametric Study Mission: the objective was to evaluate the ability to repeat the baseline scenario with controlled variations in a single parameter. The parameters to be varied related to countermeasure effectiveness and were to be the timing of flare release and/or target evasive maneuver relative to missile launch. Two test methods were to be used. In the manual method, the aircraft lab pilots were to fly the desired parametric case. In the automatic replay method, the output from the aircraft labs during one of the manual runs was to be replayed and used to drive the missile HWIL simulation.

Latency Study Mission: the objective was to incrementally increase the latency between the WSIC and the SIMLAB and to note the corresponding effect on the missile performance. This technique was to be used to determine the maximum allowable latency for which the various nodes still agree on the engagement conditions and outcome.

The schedule planned for executing these missions is shown in the upper part of Figure 3.

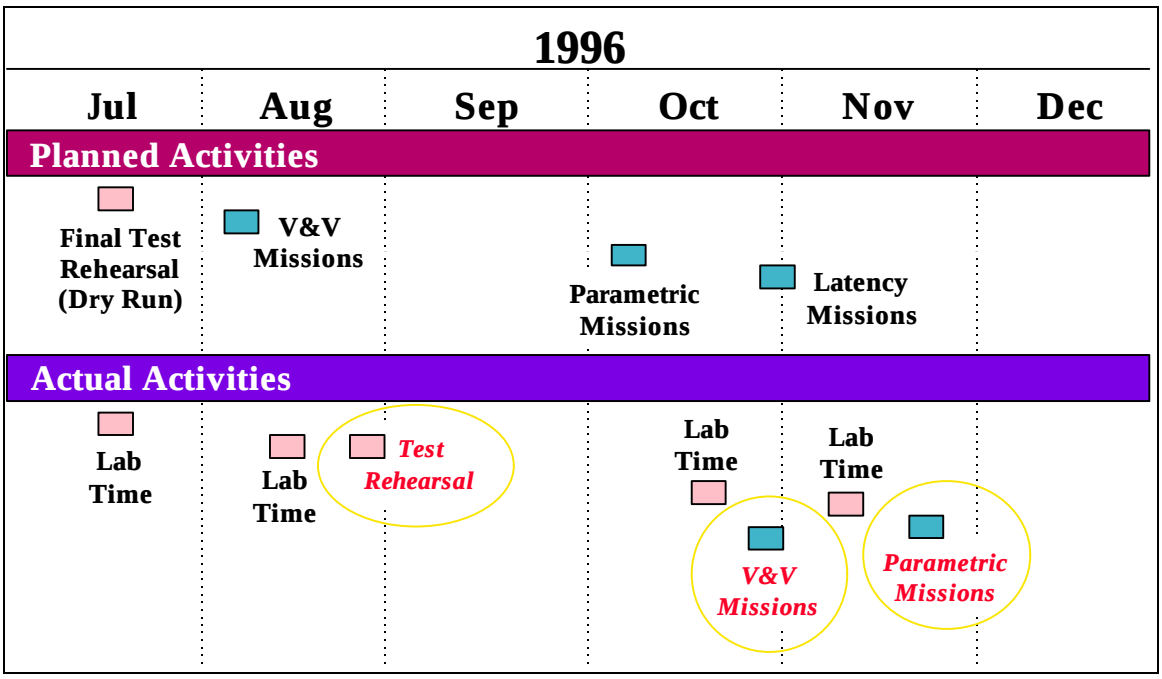


**Figure 3. Linked Simulators Phase Test Schedule**

## LSP TEST RESULTS

The bottom part of Figure 3 shows the time lines for actual testing. The time required to integrate and check out the architecture was significantly longer than planned. Full-up architecture configurations were required to verify fixes to integration problems. The periods of

integrated verification work were called “lab times”, and they moved scheduled test activity to the right on the timeline. As a result of the slips, the Latency Mission was not performed. However, the JTF collected sufficient data from the other testing to evaluate the latency test objective.

The results of the test execution is as follows:

- Testing was performed during four half-day periods (the Test Rehearsal was done over two days), and 160 runs were attempted. About two thirds of these (107 runs) were successfully linked runs with complete missile flyouts.
- Some of the causes of the aborted or incomplete runs were procedural problems (e.g., labs not reset for run), hardware or software failures (e.g., NIU failure or lab not sending out PDUs), unsuccessful missile launch (due to shooter losing lock before launch or hung missile), and the SIMLAB flight table exceeding its limits (which terminated the missile flyout).
- Overall, the LSP testing configuration had a good availability of about 85%.

A number of problems were encountered during the testing.

- The automatic replay runs did not work as planned. The objective of these runs was to achieve a precise replication of one of the manual runs. However, this could not be done due to several manual actions required for the automatic replay runs: manual start of the aircraft laboratories replay, manual trigger squeeze by the shooter pilot, and manual initiation of the flare simulation in the SIMLAB. This problem was due to the fundamental design of the simulation laboratories used and could not be fixed without significant cost and schedule slips. Because of these problems, the automatic replay runs were eliminated from the Parametric Study Mission.
- The latency exhibited large values and sample-to-sample variations during a run. In early testing, large instantaneous latency values (“spikes”) were observed, some in excess of a second. This problem was solved in later testing by resetting the NIUs before each run.
- There were several problems in interfacing the shooter and target data to the missile simulation in the SIMLAB.
  - -- The missile exhibited lofting in which it gained altitude upon launch before guiding to the target. This was invalid missile behavior (the shooter was at a higher altitude than the target). The problem was due to improper conversion of the shooter vertical velocity to the SIMLAB reference frame and was fixed during testing.
  - -- The target position as determined by the missile simulation steady diverged from the true target location during the missile flyout. This effect was significantly reduced during testing by correcting the SIMLAB coordinate frame conversion and by increasing the target velocity update rate.
  - -- The target location in the SIMLAB reference frame was improperly initialized. This caused an improper presentation of the target trajectory to the missile. As a result, the missile was successfully intercepting the target in the SIMLAB reference frame, but external observers saw the missile miss the target by over 1000 ft. This problem was not discovered until after testing was over, but has since been fixed.

The results of evaluating the test objectives are as follows.

- The SIMLAB missile performance was valid for its target representation. However, its target representation was not completely valid.
- The aircraft laboratory pilots were able to achieve good manual reproducibility of the engagement scenario. This supports the conclusion that the LSP configuration has some utility for parametric studies.
- Latency was small enough in later trials such that the different nodes could agree on launch conditions to within 10% of the shot box. However, latency was large and variable enough such that the target and missile could disagree on whether or not the target was "killed."
- The ADS network provided adequate bandwidth.
- There were no significant ADS-induced errors.
- The DIS PDUs used were adequate for entity state data exchanges.
- There was good availability of the LSP testing configuration and no wide area network failures.
- The centralized test control procedures worked well.

## LSP UTILITY CONCLUSIONS

The results of LSP testing support the following conclusions on the utility of the LSP ADS configuration.

- The LSP ADS configuration has utility for missile weapon/launch aircraft system T&E
  - -- The configuration successfully ran integrated scenarios/profiles among linked laboratories.
  - -- This configuration can be used for discrepancy/deficiency resolution, especially when there are interface issues/problems between/among weapon systems (e.g., the aircraft radar, mission computer, stores management system, and the missile). This includes troubleshooting problems which prove to be difficult to replicate, particularly those that appear in flight tests but are not readily duplicated in stand-alone laboratory testing.
  - -- Linked laboratories permit the HWIL missile to respond to actual pre- and post-launch weapon system inputs, instead of relying on stand-alone "canned" inputs, in a more operationally realistic environment

- The LSP ADS configuration has utility for parametric studies involving a one-on-one air-to-air missile engagement.
  - -- The key characteristic of a parametric study is the ability to repeat a given scenario with either no changes or with a single parameter varying.
  - -- The manual method for replicating a given profile resulted in very good run-to-run reproducibility of the launch conditions.
  - -- The automatic replay method, as implemented in the LSP, was unable to precisely replicate a given scenario and had no advantage over the manual method.

- The LSP ADS configuration has utility for rehearsal and refinement of live engagement scenarios.
  - -- Pilot training and rehearsals of live missile firings requiring difficult and/or precise launch conditions could be accomplished using this configuration. The ADS link could be used by the pilot to practice (pre-fly) the mission in a controlled laboratory environment before using aircraft and range assets. ADS could assist in doing the flight test right the first time which translates into reduced aircraft flight hours, range time, etc.

- The LSP ADS configuration has utility for terminal engagement studies involving open-loop interactions between the missile and the target (missile responds to target, but target does not respond to missile).
  - -- Latency does not affect these results, as long as the latency values are relatively constant during a run.

- The LSP ADS configuration does not have utility for terminal engagement studies involving closed-loop interactions between the missile and the target (missile and target respond to each other).
  - -- Target position errors and latencies were such that the nodes disagreed on the final range between the missile and the target by more than the missile lethal radius. Hence, the nodes could disagree on whether or not the target had been "killed."

**LESSONS LEARNED**

- <u>The network interface to the simulations is critica</u>l
  - -- <u>Accurate coordinate transformations are necessary</u>. These proved difficult at the beginning of the LSP. Coordinate transformations must be verified and validated at each site and then reverified and revalidated during end-to-end testing as early as possible in the test phase. Personnel who are subject matter experts in coordinate transformations must be assigned and readily available during this process.
  - -- <u>The NIUs need improvement</u>. NIUs of some sort are necessary if two simulators cannot communicate directly in a common language, and on a common timeline. NIUs can be a major source of both error and processing delays. For the LSP, the NIUs were difficult to troubleshoot and control. Future projects should use an improved DIS NIU or an "NIU function" (in the master simulation computer) which provides a more direct user control of the content of the data and network communications, including the capability to force network communications at a user-specified frame rate. Such improvements could simplify the overall network/ADS configuration, as well as the troubleshooting and resolution of various network/ADS/DIS problems.

- <u>Common ADS-related hardware and software is needed</u>. It was difficult to get the ADS network to behave in a uniform fashion due to the many different types of interface hardware, communications equipment (routers), and interface software versions. Additionally, lack of common software resulted in the NIUs having numerous and

different problems related to conversions, timing, CPU speed, etc. Whenever possible for future ADS test, the network hardware and interface software should be exactly the same among all the sites.

- Latency variations were significant. Aggregate latency includes the transmission delays and the processing delays on each leg of the ADS architecture. Both the transmission-induced and processing components of latency exhibited significant random variations which cannot be compensated for, although the processing delays were the dominant source of latency. Future ADS implementations which require low latencies (e.g., interactive missile engagement analyses) should focus on techniques for reducing the latency between the network interface and the receiving simulations.

- Time sources must be synchronized. Time sources at the various sites must be synchronized off of the same master time source and then must be validated at each test site prior to project operations to ensure accurate, synchronized time is precisely recorded at each test site. It took a lot of effort to get clock synchronization values into the few millisecond region, and meaningful latency measurements were impossible without this degree of clock synchronization.

- Quantitative validation has limitations. The JTF intent was to quantitatively verify missile simulation performance against live fire data. Given the facts that only a single live fly event was available to support the process and that the live engagement could not be perfectly replicated, it became necessary to modify the validation approach. The modified approach included both qualitative (in which missile trajectory shapes were compared) and quantitative methods and successfully identified invalid results (lofting missile trajectories and target initialization errors).

- A stepped buildup approach should be used
  - -- Systematic checkout of the standalone simulators is needed before linking, especially verification of simulation laboratory modifications required for ADS linking. The modifications should be performed early in the buildup and carefully checked and verified before linked testing.
  - -- Direct (non-DIS) links should be used during test buildup. This focuses early verification checks on making the linked architecture work without the additional interfaces and reference frame transformations needed for DIS implementation. This also provides a benchmark for the DIS implementation
  - -- Structured testing of the network must be performed prior to, and independent of, the linked testing times and the simulation laboratories to validate transmission/reception rates, bandwidth utilization, latency, data transmission and reception, etc. prior to commencing project test periods. A “test, analyze, fix, test” approach in combination with structured, independent testing of the network during the LSP would have been beneficial. In several cases during the LSP, linked testing time was used for testing the network where independent network testing would have been more cost effective.

- Special test equipment is needed for checkout and verification. Special test equipment and other networking tools should be part of each simulation node's configuration during the development, test, checkout, and verification/validation phases in all subsequent ADS testing. Special test equipment and networking tools are required to more rapidly isolate and determine the specific cause of network, ADS/DIS, etc. problems. Without the special test equipment and/or tools, trial and error becomes the normal troubleshooting mode which increases the resource requirements (time, schedule, cost, etc.). The equipment and tools also permit off-line testing without the exclusive scheduling of simulation laboratories and the associated costs. Individual test sites could then check their own software and hardware, verify PDUs and other ADS/DIS requirements, and verify program-specific requirements prior to the more costly linked tests. The special test equipment and networking tools developed and used by the JADS JTF for the LSP proved valuable once the equipment and tools became available to NAWCWPNS.

- Linking of facilities using ADS can require significant facility interface hardware and software development. ADS implementation is not "plug and play." Significant checkout activities were required using the full-up linked architecture.

- Additional time is needed before the beginning and after the end of each testing period. Allocate a minimum of an additional two hours of laboratory time at the end of each test period for data logging, data archiving, data transfer, and laboratory reclassification. Allocate a minimum of an additional one hour of laboratory set-up time prior to each test period. These were the normal pre- and post-test laboratory times required for each LSP formal test period. The pre- and post-test requirements should be included in the number of laboratory hours needed for each test period and incorporated into the planned costs.

- Effective data management is needed. Linked laboratories can generate a large volume of data at distributed locations. Without careful planning, key data may not be collected and/or transmitted to the analysis center, and data collected at the sites may not be in a useful form for centralized analysis. A comprehensive data management plan must be developed before testing which clearly identifies (1) the data to be collected at each site, (2) on-site processing of the data, and (3) data to be transmitted to the analysis center.

- Adequate time must be allotted for data analysis between test events. There was a tendency to underestimate the time required to adequately analyze the large volume of data collected in the test events. As a result, some problems from one mission were not fully diagnosed and fixed before the next mission. In fact, some problems (e.g., target initialization errors) were not even recognized until all testing was over. Rehearsal of the analysis procedures should be used to better estimate the time required for adequate analysis between test events.

- Test communications requirements must be addressed early in the test planning phase
  -- This is necessary to ensure effective communications during the test. Remote test control using two non-secure telephone conference bridges (i.e., two communications

nets) was acceptable. However, the audio level between connections varied, making "loud and clear" communications among all the sites difficult at times

  - -- A standard, linked test should have multiple (more than two) communications nets (e.g., control, analyst, network, and internal laboratory) with easy, selectable access to all the nets from multiple locations within the laboratory. A minimum of one secure telephone at each site is also required. More complex, linked tests may require additional non-secure and/or secure communications nets. Recommend laboratories research various communication options by reviewing their local range control center and telemetry data center communication setups.
  - -- The capability for secure video teleconferences (VTCs) among multiple (more than two) sites is required when planning, coordinating, and/or briefing integrated weapon system tests among various sites.

- Configuration control is essential. Configuration control of the network and the ADS/DIS system, including its hardware, software, and its simulator interfaces, is necessary starting at the beginning of the program. This includes a "scientific" approach to network management and troubleshooting. Either a single person or a network committee should be in charge of the configuration control/network management. The level of control will vary with the phase of the project. Since problems are part of the process, the network configuration cannot be "frozen" until there is an agreed upon "baseline." However, the configuration control process/procedures, individual/committee in charge, etc. must be established at the beginning of the program and followed until the end of the program.

- SUT experts must be involved from the beginning. Weapon system(s) analysis experts must be planned for (and budgeted for) to analyze the weapon system-related data from the system under test (SUT) and to provide the analytical results, conclusions, and recommendations. There should be more than one expert, and they must be involved from the beginning of the project to establish the data and instrumentation requirements, verify/validate the analytical approach, assist in the development of test matrices and test procedures, and provide overall weapon system expertise. Options include the support and/or user agencies providing the SUT analysis experts. Both agencies could provide their own experts who would independently analyze the data from the standpoint of the test objectives. The independent analyses would then be compared, and the SUT experts would resolve any differences in their conclusions.

- Future ADS T&E projects should be conducted following established T&E flight test practices and procedures. The LSP was more typical of a T&E flight test effort than a standard laboratory test. Specifically:
  - -- Standard Universal Documentation System (UDS) documents such as requirements documentation (e.g., Program Introduction (PI) and/or Operation Requirements (OR)) from the user agency and response documentation (e.g., Statement of Capability (SOC) and/or Operations Directive (OD)) from the support agency should be used. This would establish a clear set of requirements at the beginning of the program from the user agency and a clear statement of the support agency's capabilities, constraints, and limitations in meeting those requirements.

-- Test monitoring/control and test procedures/conduct should be run similar to a flight test. Detailed test cards should be drafted, reviewed, distributed, briefed, and used for each mission. Back-up test cards should also be considered and briefed for contingency purposes. Briefs and debriefs should be conducted before and after each mission. The briefs should cover such items as the test objectives; telephone numbers/frequencies to use for test control, etc.; test configuration of each laboratory; instrumentation and data collection requirements; go/no go criteria; contingency/ back-up plans; test conduct including a detailed review of the test cards; communications procedures; OPSEC; and the time and place of the debrief. A briefing checklist should be developed and used. The LSP used one basic profile which permitted simplified test cards and test procedures. These simplified cards and procedures, including the use of a few “step” calls, were satisfactory for the LSP.