Joint Test Environment for Electronic Warfare Testing

Lt Col James M. McCall, US Air Force
mccall@jads.kirtland.af.mil
(505) 846-1019
JADS JTF
11104 Menaul NE
Albuquerque, NM 87112

Background

The DoD has a long history of developing and testing electronic warfare (EW) systems dating back to World War II. Over this period each of the Services has established test facilities and internal test processes designed to test and evaluate a wide range of EW systems. While each Service's facilities and procedures are tailored to match unique Service requirements, the overall process for testing EW systems is similar across the Services.

The DoD Electronic Warfare Test Process, using a combination of modeling and simulation with measurement facility, system integration laboratory, hardware in the loop, installed system, and open air range testing, is designed to make the most of existing T&E technologies and resources to provide a comprehensive evaluation of EW systems. The process is a building block approach designed to build upon the strengths and minimize the weaknesses of each of the available test resources. However, even with this process, there are two interrelated areas of particular concern in EW effectiveness testing: problems associated with correlating and interpreting EW test results, and availability of appropriate resources at the right levels of fidelity to support required T&E activities.

The Joint Advanced Distributed Simulation (JADS) Joint Test and Evaluation (JT&E) was chartered to evaluate the use of Advanced Distributed Simulation to enhance the EW Test Process and address the problems identified above. A key aspect of this effort is the development, using existing test facilities, of a linked test environment with which to conduct the JADS EW test. JADS, in conjunction with the DoD CROSSBOW Committee, conducted the Threat Simulator Linking Activities Study, to specify a joint test environment for electronic warfare testing, a subset of which will be implemented to support the JADS EW test.

ADS in the EW Test Process

Using ADS to link models, simulations, and actual hardware in real-time, it is easy to postulate an ADS test environment that combines the available test resources used in the EW test process to produce an enhanced test environment to support EW system T&E.

Conceptually, this integrated test environment could support all phases of the EW system life cycle. It would act as a force multiplier, leveraging test resources not normally available to the tester at a given stage of development to allow higher fidelity, more operationally realistic testing earlier in the development and test process.

During concept exploration, high fidelity real-time digital models of the proposed EW system could be linked with mission level models, hardware in the loop and open air range assets, and human-in-the-loop simulators to provide a high fidelity, dynamic "test before you build" capability for evaluation of the system under more realistic operational conditions. System specifications could be directly evaluated and optimized against operational performance, giving the EW system evaluators a direct link between system specifications and operational requirements. Measures of Performance (MOPs) could be established early to ensure they accurately represent operational requirements and they could be collected in a virtual

environment that replicates the operational environment using the actual test assets that would be used later in formal DT&E and OT&E.

As the EW system development progresses through the Program Definition and Risk Reduction, and Engineering and Manufacturing Development stages, emerging hardware could be substituted for modeled components of the EW system, allowing incremental evaluation of the developmental system in an operationally realistic test environment. This process could allow system performance to be evaluated directly against established MOEs and MOPs in the event critical EW system specifications fluctuate due to changes in the threat or specified performance goals cannot be achieved. When the EW system is ready for OT&E, the evaluators will already have strong insight into the performance of the system in an operational environment. Actual test and evaluation scenarios could be selected based upon known areas of concern identified during earlier linked testing. Test scenarios could be rehearsed in the ADS environment prior to field testing to further optimize and refine valuable field test missions. The linked test environment could be used directly in OT&E to investigate areas where field testing is impractical (e.g., pilot end game maneuvers during missile engagements and evaluations requiring large numbers of assets that cannot be practically assembled on a test range). After system fielding, the linked test environment could be used to assess the EW system's continuing viability in the changing threat environment to refine requirements for system upgrades or follow-on systems and to evaluate the effectiveness of proposed system modifications.

Finally, the ADS linked test environment would close the gap between training and testing. Field operators could be trained in the linked test environment and participate in system evaluations, enhancing evaluators' understanding of system performance by the end user. In addition, the linked test environment could provide high fidelity training tools for such areas as mission rehearsal and tactics development.

Threat Simulator Linking Activities (TSLA) Study

The purpose of TSLA was to specify a design approach for an EW T&E environment consisting of a combination of live, virtual, or constructive players. This study developed requirements for electronically networking existing digital simulations, hardware in the loop facilities, installed system test facilities, and open air ranges to enhance DoD EW T&E capability. The study was designed to leverage previous and current linking efforts to design a dynamic and reactive, closed-loop T&E capability for federated and integrated EW systems. Other key attributes of the network design include theater-specific lay-down flexibility, realistic battlefield densities at actual frequencies, hardware-hardware interaction fidelity, and end-to-end, cause-and-effect quantification of EW test results. The study was scoped to concentrate on the radio frequency spectrum due to the large number of facilities and assets devoted to testing in this spectrum.

Phase I of this effort surveyed previous and ongoing initiatives in ADS as related to EW T&E facilities. Capabilities, limitations, and applications of ADS to augment the existing or projected federated infrastructure were be identified and documented. Phase II of the effort specified the requirements for a linked environment. Phase III developed preliminary design specifications of the ADS network.

TSLA was sponsored by the DoD CROSSBOW Committee which provided technical direction and management review for this effort. JADS, the lead DoD technical organization was responsible for project execution and management. Georgia Tech Research Institute (GTRI) conducted the study. Test facilities and ranges from all three Services participated in the study and acted as a steering committee for the study.

ADS Survey Results

The study team surveyed the major EW test facilities and ranges to baseline existing and projected capabilities relative to technical requirements for implementing an EW ADS test environment. Key

requirements included (1) previous linking experience, (2) reactive scenario generation, (3) real-time instrumentation, and (4) real-time data reduction, analysis, display, and archiving.

Previous Linking Experience: The survey concluded all the hardware in the loop and installed system test facilities had either past or on-going experience with distributed simulation and a few of the facilities had experience with the High Level Architecture. Open air ranges had minimal experience.

Reactive Scenario Generation: Scenario generation requirements include the capabilities to support non-scripted scenarios, target injection, ECM injection, dynamic terrain masking, and clutter injection. The survey concluded these capabilities are generally available at hardware in the loop facilities and some installed test facilities. Open air range threat simulators generally do not have dynamic target, ECM, terrain masking, and clutter injection capabilities, although there are on-going efforts to provide some of these capabilities.

Real-Time Instrumentation: Instrumentation requirements include the ability to monitor the RF environment, internal system operations monitoring, ECM RF output monitoring, and ECM effects monitoring. The survey concluded the ability to monitor and interpret, in real-time, the RF environment and RF ECM signals was not available at most facilities. Several facilities have on-going upgrades to provide these capabilities.

Real-Time Data Reduction, Analysis, Display, and Archiving: All the facilities surveyed had existing capabilities to support real-time test scenario visualization and real-time data archiving. All had some capability to perform real-time data reduction and analysis for a limited number of measures of performance.

In general, the TSLA survey concluded a test environment consisting of hardware in the loop and installed system test facilities could be constructed using existing capabilities. However, the construction of a large-scale joint test environment would require infrastructure upgrades at most of the surveyed facilities. The remainder of the study assumed that participating facilities would make the appropriate upgrades to their facilities.

ADS Network Requirements

The conceptual EW test environment and its associated information flows are shown in Figure 1. To simplify the figure, all possible assets have not been included, however, all assets were considered during the generation of the requirements. In the model, the divisions are made along functional breaks and nothing has been implied concerning facilities or the distribution of assets.

The implementation of the model is based on the concept of encapsulation. The first level of encapsulation recognizes the fact that many assets are inherently analog devices (e.g., radio frequency (RF)) which require some amount of instrumentation and/or analog-to-digital conversion before the asset can interact across a digital network. The distributed simulation community defines three types of assets: Live, Virtual, and Constructive. While each of these may normally exist in their own laboratory or range setting, when they are interacting in a distributed environment, they must all also “exist” in the data domain. Live and virtual assets are almost always analog systems and will need to be encapsulated in order to participate in a distributed test. Hence, for live and virtual assets, it is necessary to provide certain instrumentation which will convert the normal inputs and outputs, by which these assets usually interact, into digital data. The distributed environment imposes additional instrumentation requirements on live and virtual assets for quality assurance (QA) functions.

Constructive systems may already be digital in nature, however, in some cases legacy constructive simulations may need additional hardware and/or software to be properly encapsulated as an entity. Newly developed constructive simulations may be coded to directly take advantage of the entity encapsulation model.

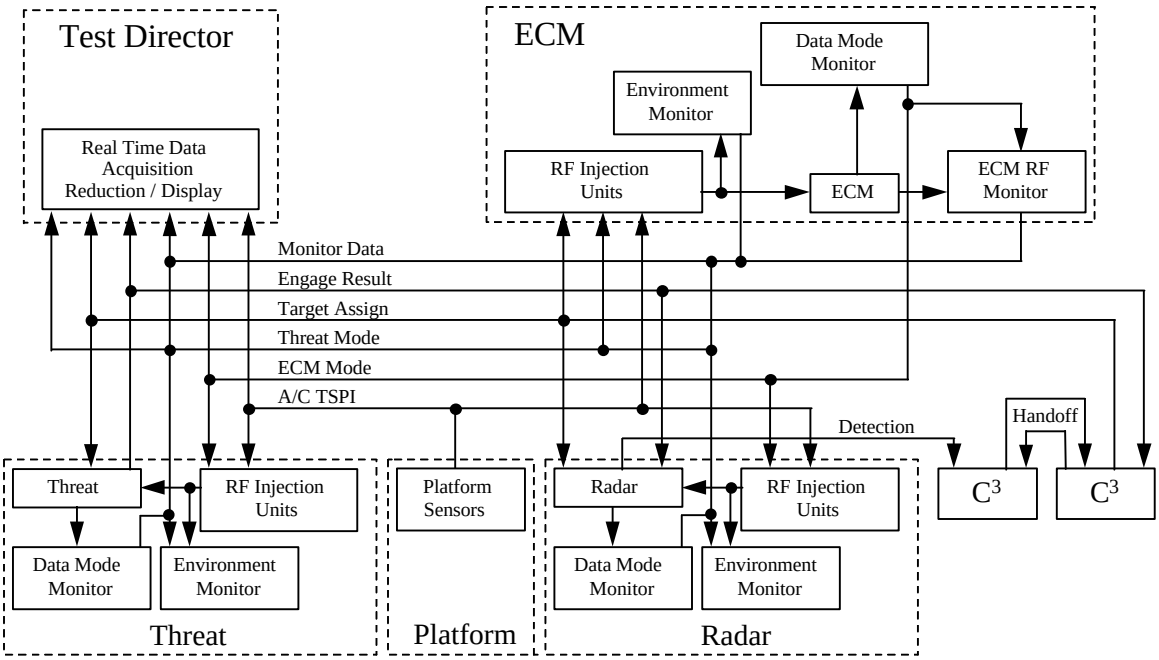

Figure 1. Conceptual Model of a Linked EW Test Environment

In each case, the collection of data from an asset (live, virtual, or constructive), and the required instrumentation to interface to the data domain shall be considered to be an ***entity***. This approach to entity definition permits the data interface to an entity to be the same, regardless of whether it is live, virtual, or constructive.

In order to thoroughly explain the details of entity encapsulation, along with the various signal injection and monitoring devices, a live radar is considered in a detailed example. A live radar interacts with its environment through the RF domain. In certain cases (e.g., a live asset within the normal operating space of the radar) all radar-to-asset interactions take place in the RF domain and no data-domain conversions are necessary. Because no digital data are exchanged, live entity to live entity interactions in the RF domain at the same location are not considered to be interactions within the scope of this environment. In other cases (e.g., the radar interacts with assets which are not within the normal operating space of the radar, or the radar interacts with a virtual asset) radar-to-asset interactions cannot take place in the RF domain. Therefore, the radar must interact with these assets in the data domain. This type of interaction is considered to be a valid interaction within the scope of the environment. Figure 2 shows an example of the encapsulation of a radar entity.

The encapsulation, in addition to containing the actual radar asset, may also contain pre-measured data (e.g., antenna pattern), signal injection equipment (e.g., target injection), dynamic monitoring equipment (e.g., mode monitor), and QA monitoring equipment (e.g., RF mode monitor). Fundamental to encapsulation are the various monitors and signal injection units that are required for data conversion. The function and data requirements for these are included in the specification.

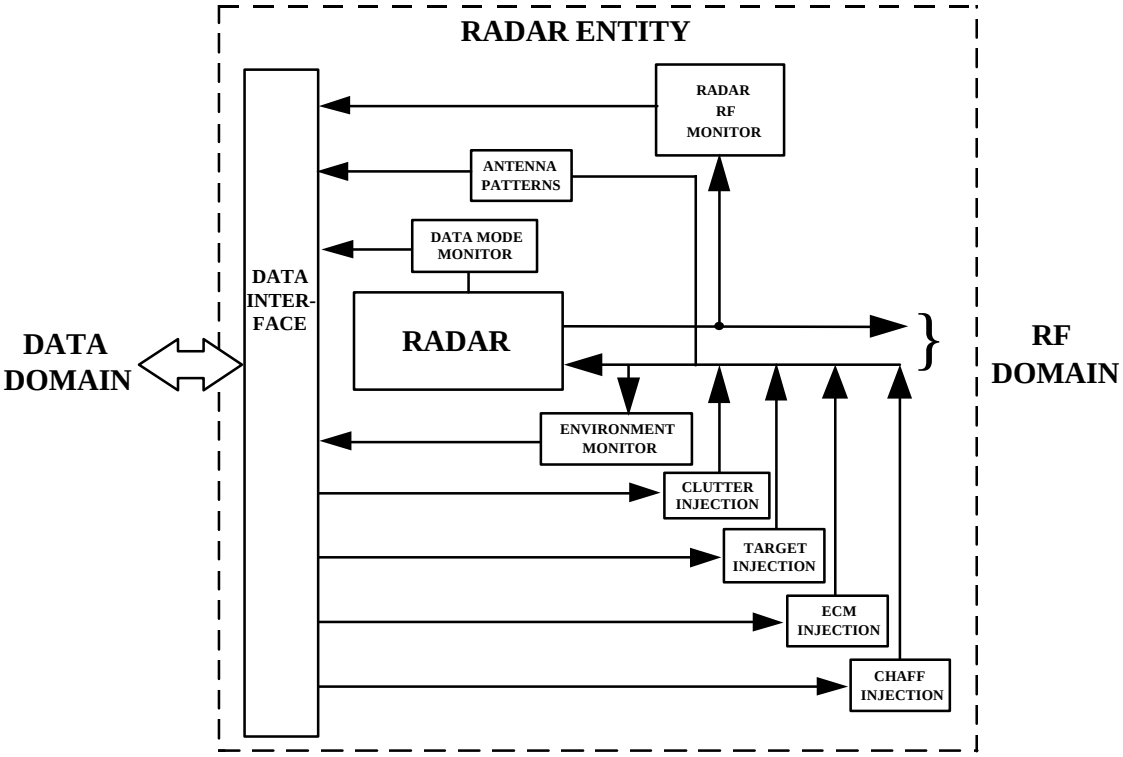

Figure 2. Encapsulation of Radar for Insertion in Data Domain.

The second level of encapsulation adds the control structures that allow an entity to function in a distributed environment. This encapsulation level recognizes the fact that many facilities are already organized around a common network gateway and explicitly supports this type of organization. The encapsulation is composed of a network interface, a facility controller, and one or more encapsulated entities. The facility encapsulation is shown in Figure 3. *A network interface, a facility controller and one or more associated entities are collectively considered to be a* ***facility***.

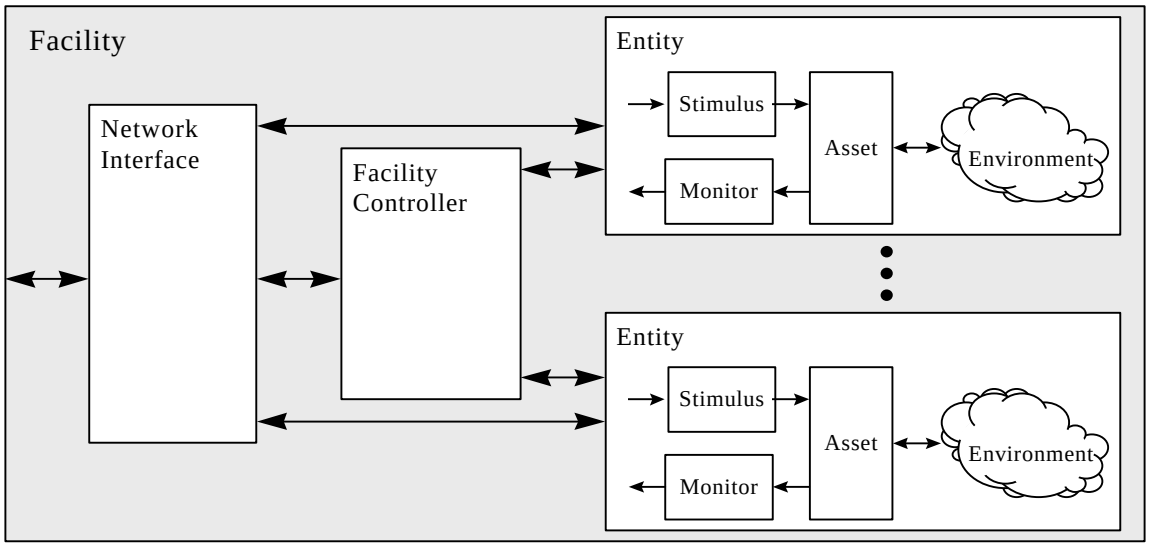

Figure 3. Facility Encapsulation

The following entity types have been identified as potential entities for an EW test environment. The specification defines the encapsulation of each of these entity types and the associated data requirements:

Radar
- *Early Warning Radar (EWR)*
- *Height Finder Radar (HFR)*
- *Target Tracking Radar (TTR)*
- *Target Acquisition Radar (TAR)*
- *Airborne Interceptor Radar (AIR)*
- *Missile Warning Radar (MWX)*

Threat
- *Active Missile*
- *Command Guided Missile*
- *Artillery*
- *Semi-active Missile*

ECM
- *Jammer*
- *Towed Jammer*
- *Radar Warning Receiver (RWR)*
- *Chaff Dispenser*

Miscellaneous
- *Platform*
- *C3*
- *Stand-Alone Environment Monitor*
- *Communication Electronic Countermeasure*
- *Facility Controller*
- *Test Director Facility*

The sharing of data between entities is another concept which must be understood to understand the feasibility of such an environment. Key to this concept is the difference between the sharing of static and dynamic data. Pre-computed or static data required by entities participating in the test shall be distributed to the entities on media prior to the federation execution. Data in this category includes radar cross section, radar and ECM antenna patterns, chaff bloom characteristics, terrain and clutter maps, and operating mode definitions for all emitters in the federation. During the test, only dynamic or reactive data is passed between the entities. Instead of attempting to perform analog to digital conversions of all emissions, only digital words or pointers representing the operating modes of the entities is passed and the injection systems recreate the modes using the stored definitions. This approach to data sharing and distribution reduces the required bandwidth between facilities and increases the latency budget for the exchanges.

For the simulated engagement to proceed properly, the location and orientation of each entity must be known to other entities in the simulation. In an EW test, there are certain sensor entities (e.g., radar) which produce perceived position estimates of the targets they detect. There are essentially two types of position that must be considered: *true position* and *perceived position*. The *true position* of an entity is reported either by the software which simulates the entity, or by the instrumentation which observes the actual location of the entity (e.g., reference radar). The true position report includes the 3-dimensional position and 3-dimensional orientation of an entity relative to a specified coordinate system. The *perceived position* of an entity is reported by a sensor entity which is an active participant in the distributed EW test. These sensors are capable of producing reports of perceived location which include various combinations of range, azimuth, elevation, and Doppler.

The environment requirements also include system requirements for the various monitors and injection systems, however, these capabilities are assumed to be part of the facility infrastructure and are not further specified. Requirements are also identified for the various environment operating modes, timing accuracy, predictive filtering or dead reckoning to predict location of entities between position updates, and system level requirement for the connecting networks. Finally, the specified EW test environment is designed to be compliant with the High Level Architecture.

Control, Display, and Reduction Capability

All test facilities have inherent capabilities for test control. These capabilities have been designed around the internal architecture of the facility and the entities represented in the facility. A joint EW test environment which links various test facilities must have the capability to provide for overall control of the environment and to interface with the controllers of individual facilities. The requirements for an

environment control, display, and reduction capability are divided between the existing facility controllers and a test director entity.

A Facility Controller entity was defined to permit access to and control of entities within a test facility without requiring that each individual entity interface be HLA compliant. Additionally, the Facility Controller shall be the physical and logical connection point for the network to all of the entities within the facility. Many facilities are already organized around a common network gateway that explicitly supports the use of a facility as the physical point of connection to the network and as a logical control point for the entities within its purview. The facility controller is the abstraction that allows all entities to properly respond to commands from the Test Director Facility. The facility controller may also abstract certain elements of each entity into its own function.

The Test Director Facility is responsible for monitoring and controlling all test activities during a test. All data transmitted over the network shall be made available for use by the Test Director Facility. This information shall be reduced, processed and displayed to keep the Test Director informed as to how the test is progressing and to assist the Test Director in determining what actions, if any, are required to alter the test sequence.

The Test Director Facility monitors, (1) data necessary to analyze the quality of the test, and (2) data necessary to evaluate the performance and/or effectiveness of the System Under Test (SUT).

Quality-of-test data includes (1) scenario visualization data, e.g., scenario map, threat laydown, target position versus time, and threat mode versus times; (2) quality assurance data, e.g., SUT response versus time, filter center plot board, verified emitter mode versus time, and verified SUT response versus time; and (3) network status data, e.g., Built In Test results and the results of entity latency measurements.

SUT data includes SUT modes, threat track files, ECM tables, blanking statistics, and output power characteristics.

The Test Director Facility controls the test execution by providing measurement scripts to instrumentation,
configuring the network, and transmitting commands to the affected nodes. To automate certain measurements, the Test Director Facility shall supply measurement scripts to particular instrumentation systems. The Test Director Facility shall be responsible for initializing network nodes and maintaining the status of the network. Commands processed by the Test Director Facility include controlling the test execution (e.g., Start test, Stop test, Pause test, and Initialize test), and reconfiguring Test Director displays (e.g., type of data to display, and size of a display window).

The requirements for both the Facility Controller and the Test Director Facility are similar and have been specified as the Control, Display, and Reduction Software Segment (CDRSS) of the environment. Figure 4 shows the five capabilities and the internal and external interfaces of the CDRSS. The CDRSS can exist in two distinct configurations. The configuration located at the Test Director Facility shall support all network-level functions including monitoring of all network entities data and health status and controlling state transitions of each entity in the environment. The Node Executive (NE) configuration shall support the minimum requirements of a facility controller. These include monitoring local entity data and health status, controlling entity states, and reporting data and status information on the real-time network.

CDRSS has three external interfaces. The Real-Time Network Interface is responsible for all data communication between the entity and the real-time network. All data associated with the encapsulation of the entity shall be transmitted over this interface. The protocol for data transmission shall conform to the High Level Architecture (HLA) interface specification. The Operator Interface supports the human operator interaction with the real-time network entity. This interface shall be implemented as a graphical user interface (GUI) designed for real-time applications. Emphasis shall be placed on displaying information in a format that can quickly and easily be detected by the operator, and a simple menu

hierarchy to permit quick access to control commands. The Facility/Entity Interface is responsible for receiving the raw data from the facility or entity instrumentation that is necessary to perform the local data reduction function and to provide data required by other entities on the real-time network.

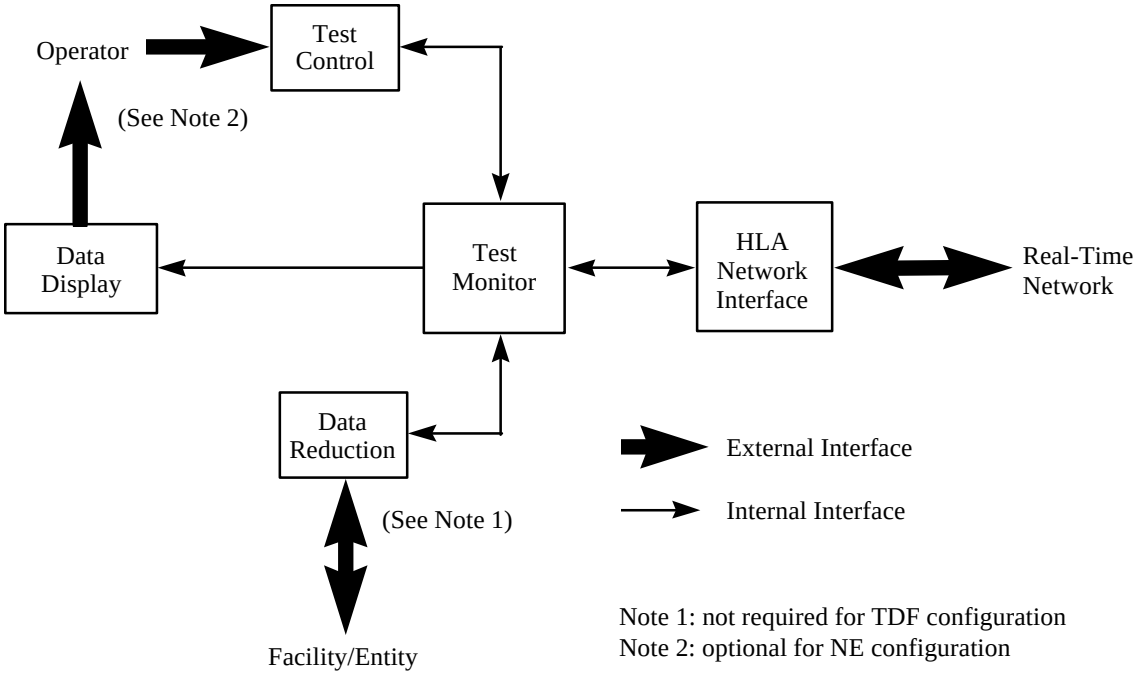

Figure 4: Control, Display, Reduction Software Segment

Implementation of the Joint EW Test Environment

At this time, there are no plans to implement a Joint EW Test Environment over the full complement of EW test facilities owned and operated by the Services. Although individual test facilities can use the concepts and specifications produced by the TSLA study to guide their individual infrastructure updates and to support limited linking with other facilities, a full implementation would require centralized management to plan and allocated resources to develop the capabilities, upgrade the facilities, establish the network, and implement the Test Director Facility.

The JADS Electronic Warfare Test will implement a subset of the environment between two existing test facilities, the Air Force Electronic Warfare Evaluation Simulator (AFEWES) and the Navy's Air Combat Environment Test and Evaluation Facility (ACETEF) and the JADS Test Control and Analysis Center (TCAC), which will serve as the Test Director Facility and will host several simulations used in the test. Two linked tests are planned using this environment for 1998 and 1999. This implementation will serve as both an evaluation of the utility of ADS to the EW Test Process and an evaluation of the Joint EW Test Environment concept.