JADS JT&E-TR-99-009

JADS JT&E

Electronic Warfare Test Interim Report Phase 1

By: Maj Darrell L. Wright and Mr. Jim Charlton

March 1999

Distribution A - Approved for public release; distribution is unlimited.

Joint Advanced Distributed Simulation Joint Test Force . 11104 Menaul N.E. . Albuquerque NM 87112-2454

CONTENTS

EXECUTIVE SUMMARY 1

1.0 Introduction 11
1.1 Overview 11
1.2 References 11
1.3 Electronic Warfare Test 11
1.3.1 EW Test Approach 12
1.3.2 EW Test Objectives 13
2.0 Phase 1 Overview 15
2.1 Purpose 15
2.1.1 Risk Reduction Test 15
2.1.2 OAR Baseline Test 15
2.1.3 HITL Test 15
2.1.4 SIL Test 16
2.2 Organizational Structure 16
2.2.1 Roles and Responsibilities 17
2.2.1.1 Deputy Director, Test and Evaluation (DDT&E) 17
2.2.1.2 JADS JTF and EW Test Team, Albuquerque, New Mexico 17
2.2.1.3 Western Test Range (413th Flight Test Squadron, Edwards AFB, California) 17
2.2.1.4 Air Force Electronic Warfare Evaluation Simulator (AFEWES), Fort Worth, Texas 17
2.2.1.5 Air Warfare Center (AWC), Eglin AFB, Florida 17
2.2.1.6 Air National Guard Air Force Reserve Test Center (AATC), Tucson, Arizona 18
2.3 Test Approach 18
2.3.1 Risk Reduction 18
2.3.2 OAR Baseline Test 19
2.3.3 HITL Test 19
2.3.4 SIL Test 19
2.4 Test Objectives 20
2.4.1 Risk Reduction 20
2.4.1.1 Specific Mission Objectives 20
2.4.1.2 Exit Criteria 20
2.4.2 OAR Baseline 21
2.4.2.1 Specific Mission Objectives 21
2.4.2.2 Exit Criteria 21
2.4.3 HITL 22
2.4.3.1 Specific Mission Objectives 22
2.4.3.2 Exit Criteria 22
2.4.4 SIL 22
2.5 Methodology 23
2.5.1 System Under Test 23
2.5.2 Test Scenario 24
2.5.3 Rules of Engagement 26
2.5.3.1 OAR Baseline/HITL/SIL Differences 26
2.5.4 Test Configuration 28
2.5.4.1 Risk Reduction and OAR Baseline 28
2.5.4.2 HITL 31
2.5.5 Constraints and Limitations 34
2.5.5.1 Cost 35
2.5.5.2 Schedule 36
2.5.5.3 Personnel 37
2.5.5.4 Threat Environment 37

2.5.5.5 Instrumentation 38
2.6 Scheduling 40
2.6.1 Risk Reduction 40
2.6.2 OAR Baseline 41
2.6.3 HITL 43
3.0 Execution Results 45
3.1 Risk Reduction Execution 45
3.1.1 Mission #1, 28 Aug 97 45
3.1.2 Mission #2, 18 Nov 97 46
3.1.3 Mission #3, 28 Jan 98 46
3.1.4 Mission #4, 25 Feb 98 47
3.1.5 Mission #5, 28 Apr 98 48
3.1.6 Mission #6, 20 May 1998 49
3.2 OAR Baseline Execution 50
3.2.1 Correct Threat ID 52
3.2.2 Correct Threat ID Response Time 52
3.2.3 Correct ECM Technique Selection 52
3.2.4 Correct ECM Technique Selection Response Time 53
3.2.5 Jamming-to-Signal Ratio Versus Threats 53
3.2.6 Increase in Tracking Error Versus Threat 53
3.2.7 Number of Breaklocks 54
3.2.8 Reduction in Engagement Time 54
3.2.9 Reduction in Missiles Launched 55
3.2.10 Missile Miss Distance 55
3.3 HITL Execution 55
3.3.1 Day #1, 27 Jul 98 55
3.3.2 Day #2, 28 Jul 98 56
3.3.3 Day #3, 29 Jul 98 56
3.3.4 Day #4, 30 Jul 98 57
3.3.5 Day #5, 3 Aug 98 57
3.3.6 Day #6, 4 Aug 98 57
3.3.7 Day #7, 5 Aug 98 58
3.3.8 Day #8, 6 Aug 98 58
3.3.9 Day #9, 7 Aug 98 58
3.3.10 HITL Test Summary 59
3.3.10.1 HITL Run Summary 59
3.3.10.2 Correct Threat ID 60
3.3.10.3 Correct Threat ID Response Time 60
3.3.10.4 Correct ECM Technique Selection 60
3.3.10.5 Correct ECM Technique Selection Response Time 60
3.3.10.6 Jamming-to-Signal Ratio Versus Threats 60
3.3.10.7 Increase in Tracking Error Versus Threat 61
3.3.10.8 Number of Breaklocks 61
3. 3.10.9 Reduction in Engagement Time 61
3 3.10.10 Reduction in Missiles Launched 61
3.3.10.11 Missile Miss Distance 61
3.4 SIL Execution 61
3.4.1 Scenario 62
3.4.2 Results 63
3.5 Repeatability and Correlation Analysis 63

4.0 Lessons Learned 65
4.1 Risk Reduction/OAR Baseline 65
4.1.1 Technical 65
4.1.1.1 Instrumentation 65
4.1.1.2 Range Operations 65
4.1.1.3 Threat Simulators 66
4.1.1.4 Data Processing and Delivery 67
4.1.2 Infrastructure 68
4.1.2.1 Personnel 68
4.1.2.2 Support Agencies 68
4.2 HITL 70
4.2.1 Technical 70
4.2.1.1 AFEWES Operations 70
4.2.1.2 Threat Simulators 71
4.2.1.3 Data Processing 71
4.2.2 Infrastructure 71

Appendix A - Acronyms, Abbreviations and Definitions 73

Appendix B - JADS EW Test Rules of Engagement. 77

Appendix C - Go/No-Go List 81

Appendix D - Site Controller Matrix 83

Appendix E - Range Instrumentation Description and Limitations 85

List of Figures

Figure 1. Planned and Actual Mission Profiles 25
Figure 2. JADS EW Test Profile 25
Figure 3. Test Aircraft Configuration 29
Figure 4. AFEWES Test Configuration 32
Figure 5. Response Time Measurement Test Setup 62

List of Tables

Table ES-1. EW Phase 1 Objectives 3
Table 1. EW Test Measures of Performance 12
Table 2. Risk Reduction Objectives 20
Table 3. Risk Reduction Exit Criteria 21
Table 4. OAR Baseline Objectives 21
Table 5. OAR Baseline Exit Criteria 22
Table 6. HITL Objectives 22
Table 7. HITL Exit Criteria 22
Table 8. Expected Differences 26
Table 9. Phase 1 Cost Summary 36
Table 10. Risk Reduction Schedule History 41
Table 11. OAR Baseline Schedule History 42
Table 12. HITL Event History 43
Table 13. OAR Baseline Mission Summary 50
Table 14. EW Test Measures of Performance 51
Table 15. EW HITL Test Measures of Performance 59

EXECUTIVE SUMMARY

1.0 Introduction

This summary serves as a stand-alone document, as well as part of this report. Therefore, there is some duplication of text as well as tables and figures between this summary and the full report.

2.0 JADS Overview

The Joint Advanced Distributed Simulation (JADS) Joint Test and Evaluation (JT&E) was chartered by the Deputy Director, Test, Systems Engineering and Evaluation (Test and Evaluation), Office of the Secretary of Defense (Acquisition and Technology) in October 1994 to investigate the utility of advanced distributed simulation (ADS) technologies for support of developmental test and evaluation (DT&E) and operational test and evaluation (OT&E). The JADS Joint Test Force (JTF) is Air Force led with Army and Navy participation. The JADS JT&E program is currently scheduled to end in March 2000.

The JADS JTF is investigating ADS applications in three slices of the test and evaluation (T&E) spectrum: ADS support of air-to-air missile testing; ADS support for command, control, communications, computers, intelligence, surveillance, and reconnaissance (C4ISR) testing; and the Electronic Warfare (EW) Test which is exploring ADS support for EW testing.

3.0 EW Test Overview

The tasking to conduct an ADS-based EW test called for an airborne self-protection jammer as the system under test (SUT). In the summer of 1995, JADS presented a comprehensive test and analysis approach for an EW test to the JT&E technical advisory board (TAB) and the senior advisory council (SAC). The JADS EW Test approach was fully supported by the TAB but not chartered initially due primarily to the high cost ($18 million). In response, JADS tailored the initial EW Test design and subsequently developed a reduced scope, lower cost test and analysis approach using the ALQ-131 jammer pod as the SUT.

The emphasis of the EW Test was on the performance of the ADS components and their contribution or impact to testing rather than on the performance of the ALQ-131 pod itself. Measures of performance (MOPs) for the jammer were identified as measures that would most likely be affected by distributed testing. Computing and correlating the MOPs became a methodology for evaluating ADS. JADS will evaluate distributed test control and analysis, network performance, relationships between data latencies, and ADS-induced data anomalies. Time, cost, and complexity, as well as validity and credibility of the data, are part of the evaluation.

The EW Test was designed as a three-phase effort providing a baseline of jammer performance data in a non-ADS environment which will then be compared to multiple tests of the same configuration in an ADS environment.

Phase 1 (the subject of this report) included (1) a risk reduction flight test effort at the Western Test Range (WTR), (2) a baseline flight test using an ALQ-131 jamming pod at the WTR, (3) a short hardware-in-the-loop (HITL) test at the Air Force Electronic Warfare Environment Simulator (AFEWES) at Fort Worth, Texas, and (4) a system integration laboratory (SIL) test at the Automatic Multiple Environment Simulator (AMES) facility at Eglin Air Force Base (AFB), Florida. The HITL and SIL tests were added to supplement the baseline flight testing and to provide missing data. This established a baseline of environment and jammer performance data against two command-guided surface-to-air missile (SAM) sites, one semi-active surface-to-air missile site, and one anti-aircraft artillery (AAA) site. This scenario was used to develop the ADS test environment for the two subsequent ADS test phases and provided the baseline data for comparison with the ADS test results. Additionally, the performance data provided a baseline for attempting correlation ability across all three phases of the test.

Phase 2 will be a test of a real-time digital system model (DSM) of the ALQ-131 receiver processor linked with terminal threats at the AFEWES facility and a scripted model of the terminal threat hand-off portion of an integrated air defense system (IADS). The threat laydown used in the Phase 1 flights will be replicated in the synthetic ADS environment; the jammer model will be flown, via the scripted flight profiles developed from the actual open air range (OAR) baseline flights and HITL test, against the AFEWES threats.

Phase 3 will be a test using the ALQ-131 jammer installed on an F-16 aircraft located in the Air Combat Environment Test and Evaluation Facility (ACETEF) located at Patuxent River Naval Air Station, Maryland. This facility will be linked with AFEWES threats using the same threat laydown as the previous tests and controlled by the same scripted flight profile.

4.0 Overview of EW Test Phase 1

4.1 Purpose

The primary purpose of this phase was to provide baseline data for verification and validation (V&V) of the results obtained in later ADS test phases. The risk reduction test missions were conducted from 28 August 1997 to 20 May 1998. The HITL portion was conducted at the AFEWES facility from 27 July to 7 August 1998. OAR baseline flight testing was conducted at the Western Test Range from 8 June to 20 August 1998. The SIL testing was conducted at the AMES facility from 15 to 18 September 1998.

Test objectives of the risk reduction, OAR baseline, HITL, and SIL portions of the EW Test Phase 1 are summarized in Table ES-1.

Table ES-1. EW Phase 1 Objectives

Objective #	Risk Reduction Objective
1.1	Verify OAR test support concept is feasible
1.2	Implement/evaluate the rules of engagement
1.3	Verify sufficient information/experience has been obtained to prepare Phase 1 documentation
2.1	Collect and evaluate Firefly data
2.2	Collect and evaluate ALQ-131 pod data
2.3	Verify planned sorties will produce sufficient sample size
2.4	Demonstrate ability to collect repeatable data on the OAR
2.5	Verify OAR data can be replicated in an ADS environment
3.1	Gather engineering data to verify data analysis tools
3.2	Exercise data analysis path/process
3.3	Verify analysis techniques, tools, and products
4.1	Evaluate observer training effectiveness
4.2	Evaluate analyst training effectiveness
5.1	Complete individual mission quick-look reports
5.2	Complete final risk reduction phase report
Objective #	**OAR Baseline Objective**
1.1	Establish jammer performance in an OAR environment
1.2	Establish the repeatability of OAR baseline test results
1.3	Establish ranges of OAR baseline statistics for event data
1.4	Establish range of correlation coefficients for series observables
Objective #	**HITL Objective**
1.1	Establish jammer performance in a HITL environment
1.2	Establish the repeatability of HITL test results
1.3	Establish ranges of HITL statistics for event data
1.4	Establish range of correlation coefficients for series observables
Objective #	**SIL Objective**
1.1	Collect 60 samples of jammer internal timing for each jammer change of state

4.2 Approach

The risk reduction and OAR baseline missions were flown by an Air National Guard Air Reserve Test Center (AATC) F-16 test aircraft with the ALQ-131 jammer and airborne instrumentation over the Western Test Range. The ALQ-131 was employed against a limited ground threat environment using a custom software tape with specific receive and transmit functions tailored to the four threats in the JADS EW Test scenario. The custom tape also implemented ECM technique changes that altered the effectiveness of the jammer. These changes, while reducing ALQ-131 effectiveness, were made to assist JADS in better evaluating the impacts of ADS. These modifications limited threat scenario variability and maximized repeatability aiding

correlation assessment during later test phases. A stabilized test scenario and threat operator procedures evolved during risk reduction and were employed throughout the open air testing.

HITL testing employed one of the ALQ-131 pods flown during the OAR baseline testing as the "hardware" in the hardware-in-the loop during the test at AFEWES. Sixty-two OAR baseline mission runs were scripted and executed at AFEWES, replicating the OAR baseline scenario and rules of engagement (ROE) as closely as possible. The HITL data were subsequently compared with OAR data for correlation purposes.

The SIL test at Eglin AFB, Florida, was created and executed in three weeks. The rules of engagement and the geometry of the OAR baseline were used to develop a set of computer instructions that activated the emitters at the proper time in the flight profile and conditioned the radio frequency (RF) signals to represent the correct signal strength to the pod. In this case, we were only interested in internal jammer timing MOPs, and all four threats were active and controlled by the computer.

5.0 Phase 1 Test Results

5.1 Scheduling

The original risk reduction schedule called for six missions to be flown between August and November 1997. Flight testing did begin on 27 August 1997 with the first mission; however, technical problems with the ALQ-131 operational flight program (OFP), instrumentation, and electronic countermeasures (ECM) technique response software programs delayed the second mission until 18 November 1997. Similar problems combined with test range and AATC scheduling conflicts, asset nonavailability, and data delivery problems continued to cause delays in mission scheduling throughout the risk reduction phase. The sixth and final risk reduction mission was flown on 20 May 1998.

The plan was to fly fourteen productive range hours to complete the OAR baseline test following the six risk reduction missions. The first dedicated OAR baseline mission was flown on 8 June 1998. Some of the same scheduling/execution problems experienced in risk reduction continued to plague the OAR baseline planning, and some missions flown were marginally productive. All of these problems together resulted in a total of 17 OAR baseline missions of 1.5 to 2.0 hours of range time being scheduled and seven missions actually being flown. The total number of range hours was 14.4. The final OAR baseline mission was flown on 20 August 1998.

The HITL test was not part of the Phase 1 test baseline. It was added when we realized we would be unable to collect all MOP data on the OAR. The HITL portion of the Phase 1 testing was executed on schedule during the last week of July and the first week of August 1998. Time synchronization problems at AFEWES precluded accomplishment of several timing MOPs, but the other objectives were accomplished. Final results analysis by Georgia Tech Research Institute (GTRI) will be provided under separate cover.

5.2 Fulfillment of Test Objectives

All risk reduction and OAR baseline test objectives were met. Even though the HITL test results did not produce answers to the timing MOPs, the Air Warfare Center SIL testing did accomplish this. Thus all essential Phase 1 objectives were essentially completed. OAR baseline mission success, i.e., data elements completed versus attempted, was approximately 78 percent.

6.0 Lessons Learned

The major lessons learned were in the areas of instrumentation, range operations, data processing and delivery, and support agency interface as shown in the following paragraphs.

6.1 Instrumentation

The overall lesson learned concerning both range and airborne instrumentation is to take the time prior to the test to thoroughly verify the real capabilities of the systems proposed. The test planner must be able to clearly define specific requirements to the test agency providing the instrumentation and ask the pertinent questions to find out whether the instrumentation meets the requirement. In most cases, modifications, improvements, and/or procedural changes are needed to tailor the use of the instrumentation to the needs of the individual test. Test facilities and instrumentation suppliers are in the business of "selling" the capabilities of their assets, and it is up to the test manager to determine their true capability/applicability by asking the hard questions. We were constrained to existing instrumentation and as a result had to overcome data shortfalls. JADS experience with the Radar Detection and Performance Analysis System (RDAPAS) assets and the ALQ-131 1553 databus cards are vivid examples of this lesson.

6.2 Range Operations

6.2.1 Mission Control

Test control was a source of execution problems. Premission problems were reduced by using a very detailed premission checklist and by the EW Test personnel deploying to the range prior to each mission to confirm preparations were being implemented according to plan. During the mission, the mission controller, in charge of calling out execution condition "marks," was sometimes hampered by other duties. Besides controlling the start and stop of each mission, the mission controller was also expected to handle real-time equipment problems as they occurred during a mission. Because of this task loading, execution "marks" were called late many times and occasionally missed. This situation improved late in the OAR baseline flight schedule when the other duties were finally delegated to someone else.

There were also occasional range coordination problems such as the incorrect range area being requested for flight clearance, confusion causing video recorders not to be turned on, execution scripts not available/not reviewed at some threat sites, and the test aircraft arriving at the initial point (IP) too early/late for the start of the range time.

Test controller workload should be analyzed ahead of time and divided among two or more individuals so that crucial test condition calls can be made consistently from run to run.

6.2.2 Threat Operating Procedures

The initial JADS approach allowed the threat operators to use their best judgment in employing the threats to acquire and track the test aircraft. However, this approach introduced too much variation in the test conditions. Therefore, a site controller matrix (see Appendix D) was developed which reduced threat operation variability and generated more consistent run conditions. However, it was realized that even with the carefully written down site controller matrix and the ROE, there was still ambiguity. The cure was face-to-face meetings with all operators early on. This meeting was followed by actual over the shoulder observation and pre- and post-briefs by designated site observers.

An associated problem involved the threat operators following the rules of engagement consistently. JADS missions were sometimes 3-4 weeks apart and the operators were not always the same from mission to mission. This required JADS to refresh the operators on JADS-peculiar operations prior to each mission to preclude errors in following the ROE. This required a lot of extra time for JADS observers to “retrain” the operators.

A detailed threat operations matrix will help ensure consistent threat turn-on/off times, mode changes, and rules of engagement procedures for a structured test such as the JADS EW Test. Also, if missions are separated by weeks, the operators need to be refreshed on operating procedures prior to each mission to ensure enforcement of the ROE. This may not be desirable in a more OT&E-oriented test but is necessary when precise baseline data are needed. The communication process with threat operators is more complicated than it would appear. For example, the “no electronic counter-countermeasure (ECCM)” ROE seemed clear and unambiguous. However, only after a series of meetings were all of the ambiguities cleared up.

6.2.3 Communications

Communication among JADS personnel in the mission control room and observers at individual sites was inadequate at first, but improved markedly with the establishment of a dedicated observer net in addition to the customer net. These nets allowed direct feedback and real-time test condition adjustments when anomalies were noted.

A separate test observer communications link between the mission control center and individual threat sites is very beneficial to detect problems and address them in near real time.

6.3 Data Processing and Delivery

6.3.1 Data Processing Tools

Data processing was supposed to be enhanced by the existence of an automated data reduction application. The application chosen was the Automated Data Reduction Software (ADRS), a GTRI product which evolves with each new customer and the needs which they bring to the table. After a series of discussions with the WTR analysts, significant progress was made in finalizing data sources, formats, and collection rates. However, the software was not completely ready before the beginning of testing and refinements continued beyond Phase 1 execution.

Our first ADRS version was plagued by software bugs which caused the system to crash frequently. Through diligent, comprehensive feedback to the GTRI programmer, nearly all these bugs were fixed. Even though GTRI was responsive, these fixes took place midstream and they hampered data reduction and analysis.

The second problem involved JADS special data analysis requirements for a small number of the MOPs. More ADRS code needed to be built to handle these requirements. This recoding took place *while* OAR baseline missions were being flown. This overlap impeded reporting final results on every MOP.

The third problem resulted from changing MOP calculation methods after receipt of the first version of ADRS. The definition and calculation of four MOPs continued to evolve throughout Phase 1 and Phase 2 execution to allow for better correlation and repeatability in the test.

Currently, the data analysis and reduction tools used for the OAR baseline missions are cumbersome, often slow to execute, and some utilities do not work (e.g., time skip function, MOP data export function). The preparatory tools used on OAR baseline mission data are the ALQ-131 digibus reader, EMV converter, Dbase utility, and the Firefly split tool. All of these tools use separate application interfaces that are often clumsy and difficult to understand (especially the ALQ-131 digibus reader). This makes it very difficult for new team members and outside personnel to understand the data analysis process and hinders productivity.

Contractor developed data analysis tools should be completely developed and demonstrated prior to the start of test. This should include hands-on practice (training) reducing and analyzing representative data expected from the test. Analysis of data from risk reduction missions will help work out the bugs in the data analysis tool and allow for improvements prior to working on data from the missions for record.

Data reduction tools need to have a common interface that will call upon the individual tools. Moreover, they should be selectable in the order used so the user knows what actions need to be performed and in what order.

6.3.2 Data Delivery

Timely data delivery is paramount to test success. A number of the JADS EW Test risk reduction missions were flown almost back to back, and it was not possible to obtain and analyze the results from one mission before flying the next. Quick data receipt and analysis can be crucial to troubleshooting and mission success, especially during a risk reduction process.

The timeline for flight test data reduction and analysis is just as important as the mission schedule timeline. Efficiency is lost (i.e., successive missions flown with bad assets) if data cannot be examined between missions. Missions (especially during risk reduction) must be scheduled with adequate time between to analyze data from the previous mission. Another lesson is that all means must be exercised to expedite delivery of range and aircraft data products to the analysts whenever mission schedules are tight.

6.4 Support Agency Interface

6.4.1 Integrated Product Team (IPT)

The IPT helped bridge gaps in expertise and with programmatic decisions. The concept of an IPT is a good one. However, disadvantages arise with the geographical separation of the members of the IPT. The JADS EW Test IPT consists of members resident from coast to coast. Teleconferencing and electronic mail (E-mail) are powerful tools that overcame some of these communication obstacles; however, the most progress is made when members meet face-to-face. This is due to the highly technical nature of the work, the concepts involved, and the software/hardware which are used on this test.

When technical problems arise, teleconferences and/or E-mail can help solve many of the issues, but in many cases face-to-face meetings between key players are needed to resolve items. This allows direct give-and-take questions to reduce incorrect interpretations and confusion of what was said versus what was meant. Such meetings must have the following elements:

- Attendees limited to those individuals from each key agency who can and will make decisions and commit required support to the test
- Specific agenda including status updates from previous actions items
- Specific action items assigned to individuals by name with suspense dates
- Periodic review and formal tracking of action item suspenses

6.4.2 AATC

Normally operations went smoothly in this area. JADS received outstanding support from AATC ECM pod personnel. However, occasionally data were lost during some of the test missions because of errors in pod control switch actions in flight. This appeared to be because of pilot unfamiliarity and/or lack of premission briefing on the pod functions and controls. A number of different pilots flew the various test missions, and some were very familiar with ALQ-131 pod operation and peculiarities, while others were not.

At times JADS had difficulty effectively scheduling AATC test aircraft, ECM pods, and personnel to support available test range periods. Scarce assets and other AATC mission priorities as well as late changes to range schedules contributed to this problem. A number of missions were lost and only a few were able to be rescheduled and flown because of the limited flexibility of AATC and test range schedules.

The aircrew must be thoroughly briefed on operation and functions of the system under test. This is especially crucial when test instrumentation is interfaced with the test item that may affect its normal operation. Whenever feasible within aircrew scheduling limitations, the same aircrew members should fly as many of the test missions as possible to reduce the learning curve from mission to mission.

The lesson learned concerning scheduling problems is that test managers must get firm support agency commitments during initial test planning and fully understand support agency and range scheduling flexibility limitations and factor those into the overall test schedule.

6.4.3 GTRI

GTRI technical expertise was crucial to the success of the JADS EW Test program. GTRI direct interaction with JADS EW Test team members was needed to address a number of data analysis issues during risk reduction. Lack of effective communication among individuals during this process sometimes was a problem which impacted solving issues. The technical expertise required was resident within the GTRI staff; however, it was difficult to access it because JADS requested a single point of contact (POC) (GTRI program manager) to coordinate the contracted technical expertise. Because of this bottleneck, the team was often unable to directly interface with the individual GTRI expert needed to solve a particular problem in a timely manner. This also unnecessarily burdened the program manager with personnel management actions instead of allowing time to work technical problems effectively. Critical details were lost transmitting information through multiple nodes in the organization and progress was impeded. This led to many miscommunications, misunderstandings, delays, and undue stress on the GTRI POC and JADS team members.

Having a contractual single point of contact to coordinate support can be a good management technique; however, that POC must be allowed to be flexible enough to arrange for and allow direct working relationships among technical experts and the test team members. Such agreements should be established early in the program and clearly defined to the satisfaction of all parties.

7.0 Conclusions

JADS was able to collect an adequate baseline data set for correlation with the ADS-based test phases. The JADS EW Test scenario was designed to reduce the run-to-run variation. The scenario was scripted as much as possible to limit the variation within each facility and across the facilities. This was largely successful. However, the test scenario stressed each facility's ability to

reduce the run-to-run variation. The primary source of variation both within and across facilities was human operator and test control. The OAR baseline had more run-to-run variation than AFEWES. A number of factors contributed to this. The time between missions was a critical factor. Better results were obtained when missions were flown on successive days. Another factor was the number of different operators from mission to mission at the OAR. AFEWES used only one team of operators for each threat. Finally, a cultural difference between the facilities was evident. AFEWES is primarily a development test facility while the OAR specializes in operational effectiveness testing. Development tests emphasize tight control and repeatability, while the operational tests emphasize operator free play and skill.

Data results are classified and are contained in a separate report to be published by GTRI. GTRI was tasked to reduce and analyze all Phase 1 data and report the results. Their report will discuss each MOP and provide the statistical results (mean and variance). The JADS EW Test team will attempt to identify sources of variance where possible. In addition, GTRI will perform the correlation analysis of OAR baseline and HITL data. The classified report will describe the baseline data that JADS will use for correlation with the ADS-based test phases.

1.0 Introduction

1.1 Overview

The Joint Advanced Distributed Simulation (JADS) Joint Test and Evaluation (JT&E) program is an Office of the Secretary of Defense (OSD)-sponsored joint service effort designed to determine how well advanced distributed simulation (ADS) can support test and evaluation activities. The Electronic Warfare (EW) Test is one of three tests comprising the JADS Joint Test Force (JTF). It was chartered separately in 1996 to test the utility of distributed simulation to the EW test and evaluation (T&E) community. This report focuses on results of the EW Test Phase 1 which consisted of six risk reduction flight test missions, a hardware-in-the-loop (HITL) effort, seven baseline open air range (OAR) flight test missions, and one system integration laboratory (SIL) effort. The primary purpose of this phase was to provide baseline data for verification and validation (V&V) of the results obtained in later ADS test phases. The risk reduction test missions were conducted from 28 August 1997 to 20 May 1998. The HITL portion was conducted at the Air Force Electronic Warfare Evaluation Simulator (AFEWES) facility, Fort Worth, Texas, from 27 July to 7 August 1998. OAR baseline flight testing was conducted at the Western Test Range (WTR), from 8 June to 20 August 1998. The SIL testing was conducted at the Automatic Multiple Environment Simulator (AMES) facility at Eglin Air Force Base (AFB), Florida, from 15 to 18 September 1998.

Background information on the history and planning for the EW Test in general and this Phase 1 effort specifically is contained in the references listed below. It should be noted that the original planning only discussed the OAR baseline efforts. The HITL and SIL were required to overcome instrumentation limitations and to better isolate ADS effects from differences between the HITL and OAR environments. The HITL and SIL are discussed in paragraphs 2.1.3 and 2.1.4.

1.2 References

Program Level Test Activity Plan and Data Management and Analysis Plan (TAP/DMAP), March 1998.

Electronic Warfare Phase 1 TAP/DMAP, July 1998.

EW Hardware-in-the Loop (HITL) TAP/DMAP, September 1998.

Electronic Warfare Test Analysis Plan for Assessment (APA), May 1996.

EW Jammer Risk Reduction Test Plan, July 1997.

1.3 Electronic Warfare Test

The tasking to conduct an ADS-based test of an EW system specifically called for the use of an airborne self-protection jammer as the system under test. In the summer of 1995, JADS

presented a comprehensive test and analysis approach for an EW test to the JT&E technical advisory board (TAB) and the senior advisory council (SAC). The JADS EW Test approach was fully supported by the TAB but not chartered initially due primarily to the high cost ($18 million). In response, JADS tailored the initial EW Test design and subsequently developed a reduced scope, lower cost test and analysis approach using the ALQ-131 jammer pod.

The emphasis of the EW Test was on the performance of the ADS components and their contribution to testing rather than on the performance of the ALQ-131 pod itself. Measures of performance (MOPs) for the jammer were identified as measures that were likely to be affected by distributed testing. Computing and correlating the MOPs became a methodology for evaluating ADS. These measures are listed in Table 1. JADS will evaluate distributed test control and analysis, network performance, relationships between data latencies, and ADS-induced data anomalies. Time, cost, and complexity, as well as validity and credibility of the data, are part of the evaluation. Specific test scenarios were selected to allow this comparison. Additionally, some test activities were planned that would not be feasible without ADS technology.

Table 1. EW Test Measures of Performance

MOP #	Description
1	Correct threat identification
2	Correct threat identification response time
3	Correct electronic counter measures (ECM) technique selection
4	Correct ECM technique selection response time
5	Jamming-to-signal ratio versus threats
6	Increase in tracking error versus threat
7	Number of breaklocks
8	Reduction in engagement time
9	Reduction in missiles launched
10	Missile miss distance

1.3.1 EW Test Approach

The EW Test was designed as a three-phase effort providing a baseline of jammer performance data in a non-ADS environment which will then be compared to multiple tests of the same configuration in an ADS environment.

Phase 1 included (1) an open air range (OAR) risk reduction flight test effort at the Western Test Range (WTR), (2) a baseline flight test using an ALQ-131 jamming pod, (3) a short HITL test at the AFEWES, and (4) a SIL test at the AMES facility. The HITL and SIL tests were added to supplement the baseline flight testing and provide missing data. The purpose of this test phase was to establish a baseline of environment and jammer performance data against two command-guided surface-to-air missile (SAM) sites, one semi-active surface-to-air missile site, and one anti-aircraft artillery (AAA) site. This scenario will be used to develop the ADS test environment for

the two subsequent test phases and will provide the baseline data for comparison with the ADS test results. Additionally, the performance data provided a baseline for attempting correlation ability across all three phases of the test. The Phase 1 test scenario was very structured and constrained to provide the greatest opportunity for repeatability of test results and correlation across the test phases. For instance, the flight profile consisted of a single aircraft track over the ground at a constant altitude and ground speed through the limited threat environment. The rules of engagement (ROE) for the threat operators were somewhat simple and limited to using primary tracking modes without electronic counter-countermeasure (ECCM) options. Also, the threats of interest were commanded on and off at specific ranges along the profile so the actions could be repeated as consistently as possible during the following phases.

Phase 2 will be a test using a real-time digital system model (DSM) of the ALQ-131 receiver processor linked with terminal threats at the AFEWES facility and a scripted model of the terminal threat hand-off portion of an integrated air defense system (IADS). The threat laydown from the OAR baseline will be replicated in the synthetic ADS environment; the jammer model will be flown, via the scripted flight profiles developed from the actual OAR baseline flights and initial HITL test, against the AFEWES threats. This phase will ultimately evaluate the ability to apply increased fidelity and resources through ADS early in the development cycle of a jammer system and to develop and refine requirements for a new system through actual effectiveness testing of a digital model of the proposed system.

Phase 3 will be a test using the ALQ-131 jammer installed on an F-16 aircraft located in an installed system test facility (ISTF) at the Air Combat Environment Test and Evaluation Facility (ACETEF) located at Patuxent River Naval Air Station, Maryland. This facility will be linked with AFEWES threats using the same threat laydown as the previous tests and controlled by the same scripted flight profile. In the normal EW test process, ISTF testing is used late in the development cycle to measure the effect of aircraft systems on the performance of the jammer. This type of testing does not normally provide a detailed measure of the effectiveness of the jammer against a variety of threats. This test will not only evaluate the installed system in the normal mode but will also evaluate the ability to perform closed-loop effectiveness testing of the jammer installed on the aircraft prior to flight test.

1.3.2 EW Test Objectives

It is difficult to assess ADS utility in the real world of EW T&E. Utility is more easily addressed if you can quantify cost savings or if you can show a capability that didn't exist with traditional test methods. Both are difficult in EW testing. There are significant technical challenges in implementing ADS in this environment as well as programmatic issues such as cost and schedule impacts. The achievable (not just theoretical) performance that can be obtained by inserting ADS into the established EW test process must be determined. The overall objective of the JADS EW Test is to address these questions and thus assess the utility of ADS to EW test and evaluation. Specific test objectives are listed in the JADS EW APA and Program Level TAP/DMAP.

2.0 Phase 1 Overview

2.1 Purpose

2.1.1 Risk Reduction Test

The risk reduction effort was designed to collect OAR data to evaluate procedures, data quality, and analysis techniques in preparation for the OAR baseline test that collected baseline data to answer the specific ADS and ALQ-131 test objectives. Another benefit of this preliminary flight test phase was collection of data that aided in identification of test range and aircraft instrumentation limitations as well as data reduction system software anomalies. This risk reduction allowed the test team to restructure some test events, to develop and optimize procedures and equipment to work around problems, and to improve the data reduction software before actual data collection for the record. Specific performance results, configuration changes, and lessons learned from the six missions flown over the WTR are delineated in Sections 3.1 and 4.1.

2.1.2 OAR Baseline Test

The purpose of the open air test was to establish baseline ALQ-131 performance data for subsequent comparison with performance data collected from Phases 2 and 3 employing ADS. Analysis results included descriptive statistics on jammer measures of performance. These values and those from the HITL testing were analyzed to support a decision on data repeatability to determine whether to proceed with Phase 2 testing. The OAR baseline consisted of seven flight missions with 10.9 range hours flown over the WTR during the June - August 1998 timeframe. The initial mission productivity was estimated at 50% and actual productivity was approximately 78%.

2.1.3 HITL Test

The purpose of the non-ADS HITL jammer test was to supplement baseline OAR performance data for subsequent comparison with performance data collected from tests employing ADS. The HITL test was not part of the Phase 1 test baseline. It was added when we realized we would be unable to collect all MOP data on the OAR. The integrated product team (IPT) chose to execute the HITL test to provide the missing data and to help isolate non-ADS differences in the correlation of OAR baseline and ADS-based tests. The HITL test was designed and executed in about half the time normally required. Scheduling was forced by facility workloads and JADS fixed schedule. This test provided the ability to collect data in a HITL environment for ALQ-131 measures of performance that were not able to be collected during the OAR baseline because of instrumentation limitations. This test also isolated other sources of variance (such as radar cross-section [RCS] and threat representation such as missile flyout) between the AFEWES facility and the WTR and characterized such sources through the correlation of HITL and OAR baseline results. This should simplify analysis for the linked test phases and allow better definition of the impacts of ADS on the test. In essence, the HITL test provided a bridge between the OAR

baseline results and the Phase 2 and 3 results. The HITL test consisted of nine days of testing that produced 341 total test runs. Usable data were obtained from 267 of these runs resulting in an estimated 78% productivity.

2.1.4 SIL Test

The purpose of the non-ADS SIL jammer test was to collect the internal timing ALQ-131 measures of performance that were not collected on the OAR baseline or the HITL tests. The SIL test was designed and executed in two weeks by Georgia Tech Research Institute (GTRI). Scheduling was based on Air Warfare Center (AWC) making the Automatic Multiple Environment Simulator (AMES) facility available to JADS on short notice. Existing ALQ-131 flight qualified test instrumentation prevented these measurements from being made during the OAR baseline effort. Time synchronization problems prevented the measurements from being made in the HITL test. The SIL test was our last attempt at measuring this. It was successful and provided us with the response data we needed to correctly calibrate the digital system model that will be used in the Phase 2 test. The SIL test consisted of three days of testing that produced 120 total test runs. All of these data were usable.

2.2 Organizational Structure

The organizational structure for coordinating and reporting during Phase 1 of the EW Test:

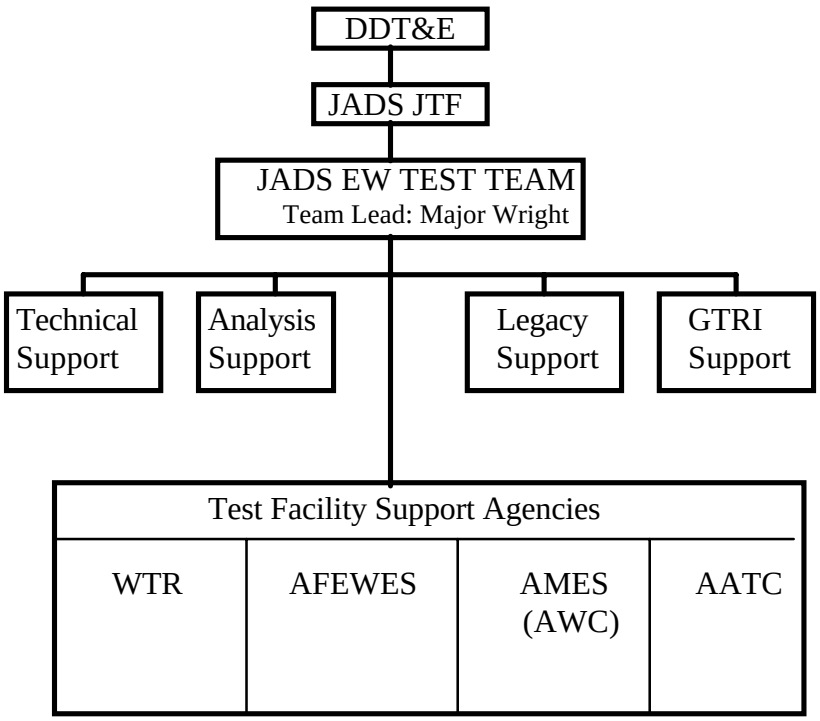

2.2.1 Roles and Responsibilities

2.2.1.1 Deputy Director, Test and Evaluation (DDT&E)

- Oversaw the JADS JT&E
- Approved JADS financial requirements
- Approved the program test plan (PTP)
- Oversaw the analysis and reporting of test results

2.2.1.2 JADS JTF and EW Test Team, Albuquerque, New Mexico

- Conducted overall planning, execution, analysis, and reporting of the test
- Managed funding to accomplish the test
- Developed and evaluated JADS issues, objectives, measures, and related data elements
- Developed and integrated the components of the EW Test environment
- Established necessary communication links with test participants
- Operated the Test Control and Analysis Center (TCAC) during tests
- Reported interim and final results to OSD

2.2.1.3 Western Test Range (413th Flight Test Squadron, Edwards AFB, California)

- Provided open air test range airspace and facilities
- Provided test mission control support
- Provided ground-based terminal threat radars and system operators
- Provided range instrumentation for Phase 1 data collection
- Provided limited reduced threat radar system data for JADS EW Test analysis
- Published a post-test mission summary report

2.2.1.4 Air Force Electronic Warfare Evaluation Simulator (AFEWES), Fort Worth, Texas

- Provided HITL test facilities and test management personnel
- Provided overall test control through the use of the Tactical Air Mission Simulator (TAMS)
- Provided simulated terminal threats and system operators
- Provided the JammEr Techniques Simulator (JETS) for background signal environment
- Provided threat test management centers (TMC) for data collection
- Provided threat instrumentation and electronic and hard copy data products

2.2.1.5 Air Warfare Center (AWC), Eglin AFB, Florida

- Provided system integration laboratory (SIL) facilities to collect ALQ-131 response time data
- Provided the Automatic Multiple Environment Simulator (AMES) and operators
- Provided a synchronous emitter and interfaced it with the AMES
- Provided an ALQ-131 pod (test item), pod support, and pod operation

- Provided the ALQ-131 operational flight program (OFP) for all testing
- Executed the SIL test and provided JADS with resulting data

2.2.1.6 Air National Guard Air Force Reserve Test Center (AATC), Tucson, Arizona

- Provided the F-16 test aircraft (A/C) and ALQ-131 pods for OAR and HITL testing
- Provided the Firefly instrumentation pods for OAR testing
- Provided test aircraft, aircrews and pod maintenance personnel and support

2.3 Test Approach

2.3.1 Risk Reduction

The EW risk reduction test was initially planned employing a "racetrack" flight profile through the representative threat environment with a trial set of rules of engagement and test conditions to collect EW effectiveness data. As risk reduction missions were flown, refinements were made to this flight profile and scenario, and a final set of conditions was chosen to employ during the remaining OAR baseline test. The missions were flown over the WTR by an Air National Guard Air Force Reserve Test Center (AATC) F-16 test aircraft with the ALQ-131 jammer and airborne instrumentation.

The ALQ-131 was employed against a limited threat environment consisting of threat systems equivalent to the Eglin Test Range simulations designated as the Simulated Air Defense System (SADS) II, SADS III, SADS VI, SADS VIII, and Weapon Evaluated Simulated Threat (WEST) XI (referred to as WEST X during the test) systems. The SADS II was replaced by the SADS III after the first mission because of SADS II system operating problems The ALQ-131 was originally programmed with modified mission software tapes provided by Warner Robins Air Logistics Center (WR-ALC), Georgia, to receive all threats, but only respond to our threats. This tape set failed to perform correctly. Our second attempt was a full combat mission software tape to receive, process, and jam an extensive threat array that would be expected in an actual combat scenario. This tape set was provided by AWC. We were unable to use this tape because we were unable to monitor the range environment sufficiently to reconstruct correct versus incorrect pod responses during analysis and to allow the environment to be reproduced in the ADS-based test phases. Additionally, Georgia Tech Research Institute suggested a different electronic countermeasure (ECM) technique that would allow better ADS assessment by adding more jammer/threat interactions. As a result, JADS authorized GTRI to perform limited modeling to determine a technique that would be appropriate. AWC supplied a custom tape set to meet JADS requirements. While the tape set was constructed of off-the-shelf techniques, including the recommended WEST X technique, JADS did not select the most effective techniques against each threat. The tape set also had limited receive and transmit functions tailored to the specific four threats in the JADS EW Test OAR baseline scenario. This simplification limited threat scenario variability and maximized repeatability, aiding correlation assessment during later test phases. However, this simplification affected response time measures of performance, making any comparison between these results and previous results from other tests meaningless.

2.3.2 OAR Baseline Test

The OAR baseline test approach evolved from lessons learned during risk reduction. The final OAR baseline test conditions were refined during the earlier risk reduction missions and consisted of the F-16 test aircraft flying a single track, north-south flight profile through the threat environment at the WTR. The stabilized test scenario and threat operator procedures (ROE) that had been developed during risk reduction were employed throughout the open air testing.

2.3.3 HITL Test

The HITL test was generated to attempt to answer two MOPS that were not able to be addressed during OAR baseline testing because of instrumentation limitations discussed later. These MOPS were 1) correct threat identification response time and 2) correct ECM technique selection response time. The HITL test used one of the same two ALQ-131 pods flown during the OAR baseline testing as the "hardware" in the hardware-in-the loop during the test at AFEWES. Sixty-two OAR baseline mission runs were scripted and executed at AFEWES, replicating the OAR baseline scenario and ROE as closely as possible. The simulated threat engagements duplicated the OAR baseline test conditions by conducting both "dry" (jammer not active) and "wet" (jammer active) runs. Unlike the OAR where all four threats were engaged at the same time, the AFEWES threats were engaged in pairs with the second threat pair generated using the JETS equipment for signal density only. This difference should not have a measurable effect on the measures of performance (MOP) results. The same data were collected as those collected in the OAR baseline to answer the same MOPs. The HITL data were subsequently compared with OAR baseline data for correlation purposes.

2.3.4 SIL Test

The SIL test was created and executed in three weeks after it was determined that the HITL test did not produce adequate data to answer the two timing-related MOPS referenced in paragraph 2.3.3. JADS was able to take advantage of an offer from AWC to use the AMES facility at no cost to JADS. We were unable to transport the AATC-owned pod to Eglin AFB in time for the effort. As a result, JADS used a pod supplied by AWC. The pod was loaded with the JADS tapes for the test. This was acceptable to JADS as the pod-to-pod variance in response times for directly injected signals should be quite small. The rules of engagement and the geometry of the OAR baseline were used to develop a set of computer instructions that was used to activate the emitters at the proper time in the flight profile and to condition the radio frequency (RF) signals to represent the correct signal strength to the pod. In this case, we were only interested in internal jammer MOPs, so we only executed wet runs. All four threats were active and controlled by the computer. A single set of instructions was created covering both the north and south runs. In each run, the aircraft was reversed at the north initial point (IP) and "flown" back to the south IP.

2.4 Test Objectives

2.4.1 Risk Reduction

The overall objective of the risk reduction test phase was to collect ALQ-131 performance data against selected ground threats to evaluate and optimize test scenarios, procedures, data quality, and analysis techniques in preparation for the baseline OAR flight test.

2.4.1.1 Specific Mission Objectives

Table 2 summarizes the objectives for the major risk reduction mission events.

Table 2. Risk Reduction Objectives

Event	Obj #	Objective
1.0 Refine Phase 1 execution planning	1.1	Verify OAR test support concept is feasible
	1.2	Implement/evaluate the rules of engagement
	1.3	Verify sufficient information/experience has been obtained to prepare Phase 1 documentation
2.0 Gather and evaluate sample data	2.1	Collect and evaluate Firefly data
	2.2	Collect and evaluate ALQ-131 pod data
	2.3	Verify planned sorties will produce sufficient sample size
	2.4	Demonstrate ability to collect repeatable data on the OAR
	2.5	Verify OAR data can be replicated in an ADS environment
3.0 Validate data processing tools and analysis techniques	3.1	Gather engineering data to verify data analysis tools
	3.2	Exercise data analysis path/process
	3.3	Verify analysis techniques, tools, and products
4.0 Train JADS personnel	4.1	Evaluate observer training effectiveness
	4.2	Evaluate analyst training effectiveness
5.0 Document results	5.1	Complete individual mission quick-look reports
	5.2	Complete final risk reduction phase report

2.4.1.2 Exit Criteria

The risk reduction exit criteria are directly related to the objectives above. Table 3 delineates the exit criteria for the risk reduction phase.

Table 3. Risk Reduction Exit Criteria

Objective	Exit Criteria
1.1	Sufficient data collected to confirm that OAR test support concept will work
1.2	Rules of engagement for Phase 1 testing are stable and valid
1.3	Sufficient information obtained to prepare quick-look and final reports
2.1	Firefly data adequate to answer appropriate measures of performance
2.2	ALQ-131 data adequate to answer appropriate measures of performance
2.3	Sufficient samples of each test condition to credibly answer appropriate MOPs
2.4	Data are consistent and repeatable within and between missions
2.5	OAR data collected that can also be collected at AFEWES during Phase 2
3.1, 3.2, 3.3	Successful data analysis using ADRS and other appropriate tools
4.1	Observers able to understand, collect, and document all required OAR data
4.2	Analysts able to use ADRS and other tools to analyze all required OAR data
5.1	Quick-look reports completed with sufficient detail after each test mission
5.2	Risk reduction final report completed

2.4.2 OAR Baseline

The overall objective of the OAR baseline testing was to collect baseline ALQ-131 performance data versus the threats for comparison with later test phases.

2.4.2.1 Specific Mission Objectives

Table 4 summarizes the specific OAR baseline objectives.

Table 4. OAR Baseline Objectives

Objective #	Objective
1.1	Establish jammer performance in an OAR environment
1.2	Establish the repeatability of OAR baseline test results
1.3	Establish ranges of OAR baseline statistics for event data
1.4	Establish range of correlation coefficients for series observables

2.4.2.2 Exit Criteria

The OAR baseline exit criteria related to the objectives above are shown in Table 5.

Table 5. OAR Baseline Exit Criteria

Objective #	Exit Criteria
1.1	Sufficient OAR baseline data collected to confirm consistent jammer results
1.2	OAR baseline results statistically repeatable
1.3	Statistical ranges defined for all event data
1.4	Correlation coefficients defined for all series observables

2.4.3 HITL

2.4.3.1 Specific Mission Objectives

Table 6 summarizes the specific HITL objectives.

Table 6. HITL Objectives

Objective #	Objective
1.1	Establish jammer performance in a HITL environment
1.2	Establish the repeatability of HITL test results
1.3	Establish ranges of HITL statistics for event data
1.4	Establish range of correlation coefficients for series observables

2.4.3.2 Exit Criteria

The HITL exit criteria related to the objectives above are shown in Table 7.

Table 7. HITL Exit Criteria

Objective #	Exit Criteria
1.1	Collect data from at least 60 runs executed twice (2 data samples per run = 120 runs)
1.2	Use the high level architecture (HLA)/runtime infrastructure (RTI) interface logger to write data files for ADRS processing
1.3	Isolate ADS impacts from other factors affecting correlation
1.4	Provide calibration data for the digital system model (DSM) for Phase 2

2.4.4 SIL

The only objective for the SIL was to collect 60 samples of the jammer internal timing MOPs for each state the jammer saw in a perfect engagement. No specific entry or exit criteria were established prior to beginning the effort. GTRI established specific technical milestones to meet during the test build-up. These were related to specific measurement accuracy and integration requirements that had to be satisfied to make the test successful for JADS.

2.5 Methodology

In general, the test method employed during Phase 1 testing was structured to be within the constraints imposed to provide maximum opportunity for repeatability of specific events and, therefore, correlation during later test phases. High threat density and multiple reference test conditions that would be typical in an EW operational test were not desirable in the Phase 1 OAR baseline and HITL testing. A single reference test condition against a limited number of threats operated within strict ROE was preferred. After several risk reduction missions, it was evident that limited relaxation of this single reference test condition was required. Thus, instead of considering all northbound and all southbound runs during the OAR baseline as a single test condition, runs in each direction were separated into their respective data sets. The specific test conditions and configurations that were accomplished are explained in the following paragraphs.

2.5.1 System Under Test

The JADS EW Test jammer was a three-band ALQ-131 Block II jammer pod modified with instrumentation interfaces for data recording. Two jammer pods (serial #0633 and #0631) were reserved by AATC for this series of testing. Both pods were carried on the two test aircraft during the first two risk reduction missions and only one pod was allowed to radiate against the threat radars at any one time. On the remaining OAR baseline missions only one aircraft and pod were employed. Pod #0631 was used on mission #3. Data from this mission indicated problems with the pod performance and subsequent bench tests at AATC confirmed that the high band radiation was intermittent. Thus, pod #0633 was employed on missions #4 through #6 and remained the jammer pod for all of the following OAR baseline tests. Pod #0631 was repaired and used for the HITL testing at AFEWES.

During the risk reduction and OAR baseline testing, ALQ-131 pod data were obtained from two sources: a set of ALQ-131 recorder cards provided by the Air Warfare Center, Eglin AFB, Florida, and a military standard (MIL-STD)-1553 databus interface card built by Southwest Research Corporation (SWR). Both sets of data cards were carried internal to the pod. The ALQ-131 recorder cards recorded ALQ-131 receiver processor data via the internal digibus in the pod. These data were time-tagged by an internal clock chip and saved in memory on the cards to be retrieved after each mission. The SWR 1553 databus interface card collected digibus messages transmitted by the jammer pod and transmitted the data to the Firefly instrumentation pod described below. For the HITL testing, the ALQ-131 recorder cards were replaced by a digibus monitor built by GTRI to collect data. The Phase 3 test will also use the digibus monitor.

The ALQ-131 mission and preflight software programs evolved over the course of the risk reduction missions and two integrated product team (IPT) meetings. The initial IPT recommendation was to use a limited response while allowing the pod to try and identify all signals. This WR-ALC software load failed to perform correctly when presented with simultaneous threats. It created jamming responses that were not supposed to be part of the tape load. Our second approach was to use a full combat mission software load developed by AWC which would have allowed the pod to receive, process, and respond to all valid threat signals in the environment. This program was designated as operational flight program (OFP) 3130, link

39, preflight message (PT)/mission tape (MT) 3711. Results from the next two missions indicated a more restrictive software load was required. Limiting the pod's ability to receive and respond to the specific threats of interest to JADS would provide more meaningful results and better repeatability. In an operationally realistic EW effectiveness evaluation, it would be desirable for the pod to process the entire threat environment; however, for the JADS purpose of establishing a baseline test condition, it was more useful to narrow the number of emitters processed to a few for maximum correlation with following test phase results. Also, the manually tuned Signal Analysis System (SASY) RF receivers at the range were inadequate to capture the background environment and collect samples of non-JADS emitters at the same time. AWC strongly recommended using a limited reception/limited response tape for the JADS scenario because that matched their operational practice of limiting reception and response to the expected threat environment. Several technical meetings between AWC, GTRI, and JADS resulted in a final mission tape configuration designated PT-0700, MT-0701. This tape limited the pod to reception of only the four JADS threats of interest and limited jamming responses to a single ECM technique per threat.

2.5.2 Test Scenario

The initial risk reduction plan called for six F-16 flight test missions to be flown at the WTR with four of these employing the ALQ-131 jammer pod and two missions employing the ALQ-184 jammer pod. The latter two missions were planned to collect data for AATC evaluation of an upgrade to their ALR-69 radar warning receiver (RWR). Because of late delivery of the software required for the RWR upgrade, all six missions to collect data for the JADS risk reduction objectives were eventually flown with the ALQ-131.

The flight profile originally planned for the risk reduction and later OAR baseline missions was a 50 nautical mile (NM) "racetrack" pattern to be flown between 14,000 to 20,000 feet mean sea level (MSL) at 450 knots ground speed. This scenario was modified after the first mission to a 22 NM "dog bone" profile flown at 9,000 feet MSL and 360 knots to allow the threats better opportunity for full acquisition and tracking engagements. The planned and actual mission profiles are illustrated in Figure 1. The racetrack flight profile was changed to a "dogbone" profile to reduce the two-leg flight path (two conditions) to a single flight path through the threat environment (one condition). It was also shortened to 22 NM to optimize the number of test runs per hour while still allowing the four threats to fully engage the aircraft. The flight altitude was lowered to 9,000 feet MSL to bring the aircraft within firing range of the WEST X threat system for more realistic engagements. Even lower altitudes were considered but rejected to avoid terrain multipath and clutter problems. This approach was taken because AFEWES does not have a terrain or ground clutter database. Therefore, correlation of results between test facilities is more feasible if the test conditions are similar, i.e., no clutter. All OAR baseline missions were flown using the refined profile; the HITL and SIL tests also replicated this profile for consistency.

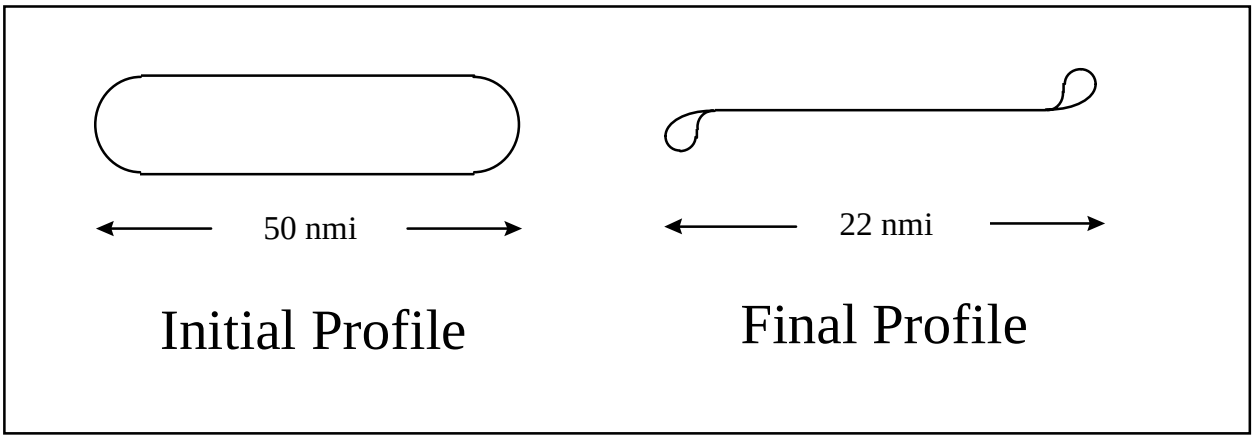

Figure 1. Planned and Actual Mission Profiles

The final threat scenario consisted of four threat systems (two command-guided surface-to-air missile sites, one semi-active surface-to-air missile site, and one anti-aircraft artillery site) that used the Eglin Test Range simulator designations SADS III, SADS VI, SADS VIII, and WEST X. The threats were realistically deployed along the mission profile at the WTR as shown in Figure 2.

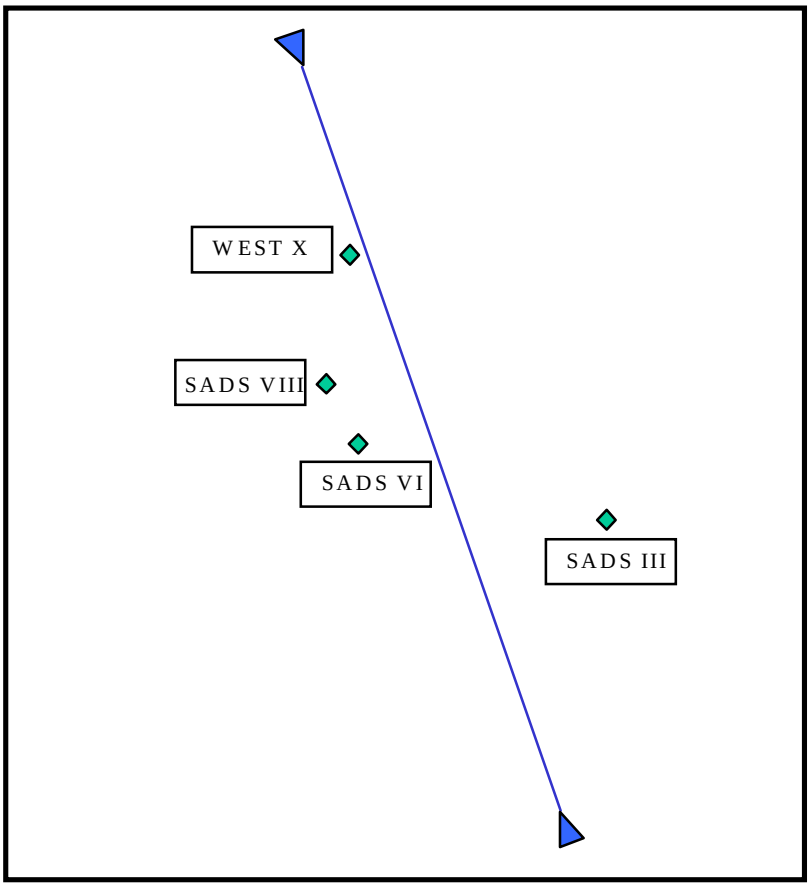

Figure 2. JADS EW Test Profile

2.5.3 Rules of Engagement

To ensure consistent threat operating procedures and the maximum opportunity for repeatability and correlation assessment between Phase 1 and Phase 2 testing, a documented list of ROE was developed prior to the start of risk reduction. As missions were flown and WTR threat operations became better understood, modifications were made to the ROE for each threat. The ROE were baselined after risk reduction mission #3 and the same guidelines were used throughout the remaining missions. These same rules, with slight modifications, were also used at AFEWES during the HITL testing. The ROE document is at Appendix B.

2.5.3.1 OAR Baseline/HITL/SIL Differences

The IPT identified several components that would be different from the OAR baseline to the ADS-based test phases. These differences could have some impact on the EW MOPs, but the impact would have to be measured or estimated in order to isolate them from the impacts of ADS on correlation. The HITL test was added to help identify and quantify the difference between the OAR and AFEWES environments. Some of the expected differences associated with the JADS EW Test and the facilities involved that could affect correlation are shown in Table 8.

Table 8. Expected Differences

Test Component	**Test Location**			
	OAR Baseline Versus HITL	HITL Versus SIL	OAR Baseline Versus ADS	HITL Versus ADS
F-16 RCS	**X**	**N/A**	**X**	**O**
ALQ-131 antenna patterns	**X**	**X**	**X**	**O**
Threat representation	**X**	**X**	**X**	**O**
ECM technique	**X**	**N/A**	**X**	**X**
Missile flyout	**X**	**N/A**	**X**	**O**
Time-space-position information (TSPI)/attitude	**X**	**X**	**X**	**O**
RF environment	**X**	**X**	**X**	**O**

Legend: **X** = Difference Expected, **O** = No Difference Expected

The significant differences experienced during this phase of testing are explained in the following paragraphs.

2.5.3.1.1 Radar Cross-Section (RCS) Differences

The actual aircraft RCS on the range was different from the RCS database at AFEWES. The AATC aircraft was flying a nonsymmetrical load (one Firefly pod on station 7 only) on the wings

during the OAR baseline test. The AFEWES RCS database contains data that support an aircraft equipped with a symmetrical load (ordinance on both stations 3 and 7). RCS was not used in the SIL.

2.5.3.1.2 Simulation (Threat Parameter Baseline) Differences

Because of design differences between the AFEWES and the OAR simulators, ROE were developed to reduce simulation variability between facilities. Some of the differences are related to functions not simulated at AFEWES and others involve radar performance tolerances. For instance, the OAR SADS VI includes all radar functions (target acquisition, tracking, illumination, missile seeker etc.). AFEWES simulated only the missile seeker portion of the system. AFEWES does not employ any optics, television or identification friend or foe (IFF) functions to aid radar tracking, whereas the OAR systems do include these where appropriate. These latter features were not allowed to be used during OAR baseline data collection; however, optics were allowed during initial target acquisition to ensure the target was in radar boresight at the beginning of data runs. This capability (to find the target unerringly) was simulated at AFEWES by starting runs with the target centered (perfect boresight) in the radar search pattern. There were other differences between the OAR and AFEWES systems because of the level of fidelity in implementing radar capabilities. Examples include differences in radar beam widths (impacts clutter elimination), sidelobe levels, antenna gain, receiver band widths, effective radiated power levels, automatic gain control levels, and implementation of features such as moving target indicator and home-on-jam. The specific differences in these areas are quantified in simulation validation (SIMVAL) reports published on each specific threat system represented at both the OAR and AFEWES. The threat representations at the SIL were simple RF generators programmed to create the threat waveforms at the proper time in the engagement. The emissions needed to be accurate enough to get the pod to respond. No other verification was performed on the waveforms.

2.5.3.1.3 Test Execution Differences

There were also a few differences in the test execution process between the OAR baseline and HITL tests. The major difference was in the SADS VI operation (mentioned above), where the AFEWES lab only simulated the missile seeker operation. Therefore, AFEWES only had to provide one computer engineer to control the signal inputs and simulate flyout results from the seeker, whereas the OAR provided a full operational crew to control all of the radar functions (target acquisition, tracking, illumination, missile launch, etc.). Another difference was how the range and lab provided the threat radars with aim point information to the aircraft. The range provided a slave mode for the radars to receive pointing angles from an unjammed range acquisition radar, while the lab provided this function by giving direct target location to the threat simulator (done by using an “initial condition (IC) button” or a “To ECM” switch). The laboratory provided a somewhat clean RF environment without extraneous signals, so the lab did not require a SASY-type facility for broadband RF monitoring. For execution, the lab could dedicate an entire day for one project, so JADS could accomplish 60-80 runs per day instead of 15-20 at the range. The lab did not require an aircraft, just the jamming pod in an RF screened room. The pod did not have any free space emanations, but instead injected the attenuated RF

signals behind the antenna feeds in the pod. Lastly, the lab did not generate new aircraft flight paths, but instead used the same time-space-position-information (TSPI) data that were recorded at the range. The SIL was a simpler version of the HITL test. No operators were involved, there was no issue of tracking (all threats were assumed to have perfect tracking) and all signals were injected into the pod. The computer controlled the activation and deactivation of the RF sources to mimic the OAR environment. The flight path was a computer-generated straight line between the two IP points at a fixed 9000 feet (ft) MSL altitude.

2.5.4 Test Configuration

2.5.4.1 Risk Reduction and OAR Baseline

2.5.4.1.1 Test Range

The Western Test Range provided the SAM and AAA threat environment, threat systems instrumentation, RF environment monitoring, TSPI, and data collection for the JADS EW Test risk reduction and OAR baseline missions. Specific threats and their parameters are listed in the range Test Support Plan dated August 1997.

2.5.4.1.2 Test Aircraft

Two F-16C Block 25 test aircraft were initially used for the risk reduction missions. Both aircraft were provided and flown by AATC. Aircraft tail number 1180 was a two-seat model and the second aircraft (tail number 1262) was a single-seat model. Both aircraft were equipped as shown in Figure 3 with the ALR-69 RWR including a video recorder, Range Applications Joint Program Office (RAJPO) pods for range TSPI, a Firefly instrumentation pod, two fuel tanks, and an ALQ-131 Block II jammer pod as the system under test.

Both aircraft were flown in close formation on the first two risk reduction missions primarily to collect data for AATC equipment upgrades but also to collect the JADS EW Test data. Subsequently, risk reduction missions #3 through #6 were flown with a single aircraft. The desire was to fly the same aircraft on all risk reduction and following OAR baseline missions to maintain consistent radar cross-section configuration; however, the two-seat aircraft #1180 was substituted for one mission (mission #4) because the primary test aircraft #1262 was not available. Aircraft #1262 was flown for all remaining OAR baseline sorties during Phase 1 testing.

2.5.4.1.3 Instrumentation

2.5.4.1.3.1 Test Range

Test range instrumentation was used to monitor and record test activity and ensure data were available to evaluate the JADS EW Test measures of performance. The range instrumentation consisted of: a Signal Analysis System and associated signal vans; spectrum, pulse, and network analyzers; individual threat site instrumentation; the Radar Detection and Performance Analysis

System (RDAPAS); and ground tracking reference radar. Detailed descriptions of these systems are at Appendix E.

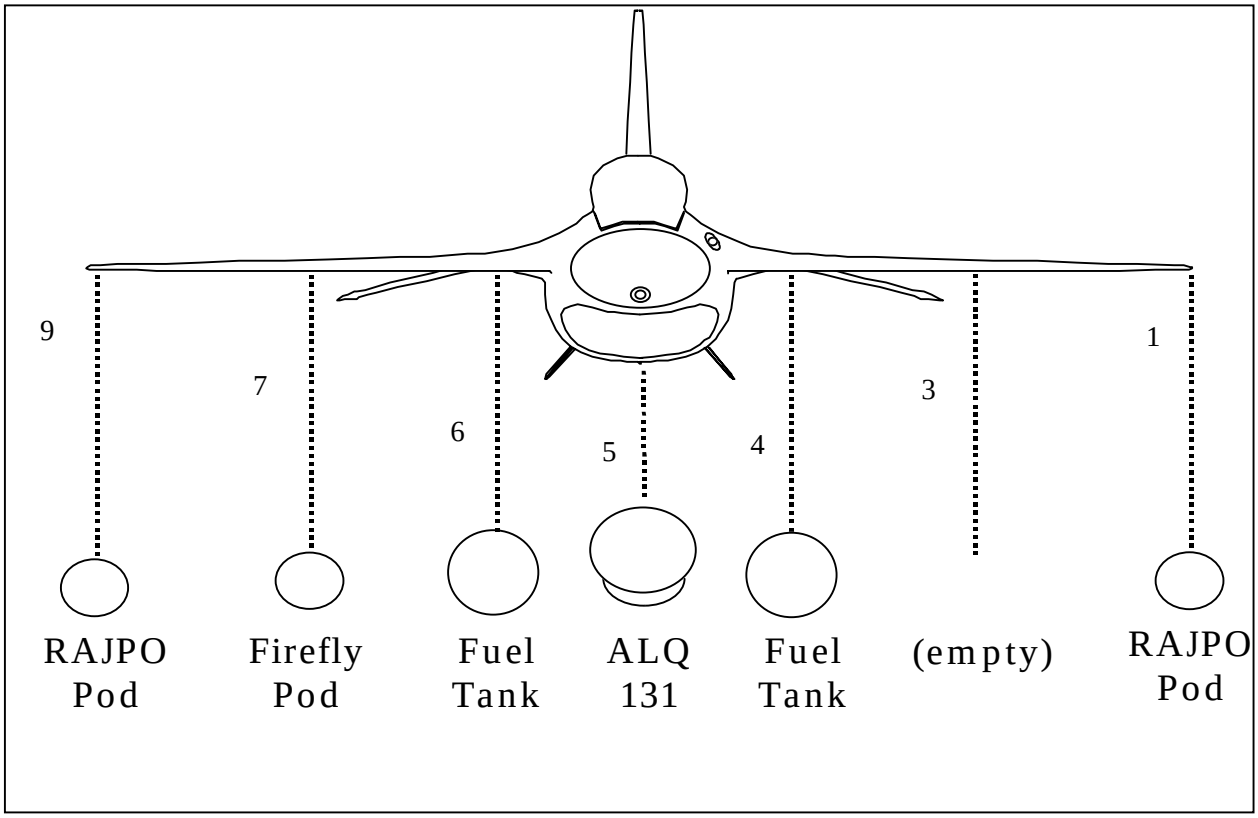

Figure 3. Test Aircraft Configuration

2.5.4.1.3.2 Test Aircraft

Aircraft data were collected by three instrumentation sources: ALQ-131 recorder cards within the pod, the Firefly instrumentation pod carried on aircraft station #7, and video recordings of the ALR-69 radar warning receiver display. The ALQ-131 recorder cards recorded ALQ-131 receiver processor (R/P) data via the internal digibus in the pod. These data were time-tagged by an internal clock chip and saved in memory on the cards which were retrieved after each mission. The Firefly pod is a modified general instrumentation pod housing the GTRI-developed Firefly recorder and a global positioning system (GPS) receiver and antenna. Data collected by the Firefly recorder included data from the 1553 interface card in the jammer pod, ALR-69 RWR threat parameters, and inertial navigation system (INS) attitude and position information. The ALR-69 video data included threat situation displays showing the signal environment throughout each mission. These systems and their measurement requirements are further defined below.

2.5.4.1.3.2.1 ALQ-131 Recorder Cards

The recorder card data were time-tagged using a time-of-day source (synchronized to an external source) on the card and saved in memory to be retrieved after the missions. The recorder card

was required to capture the emitter track file update events and the pod responses to technique assignments. These data were used to determine which threats had been detected and identified by the R/P and which threats had been assigned a jamming technique. The time-tag resolution and accuracy for collected events was required to be less than 10 milliseconds (ms).

2.5.4.1.3.2.2 Firefly Instrumentation Pod

The Firefly recorder is a generic MIL-STD-1553 bus recorder capable of monitoring two separate buses simultaneously in its standard configuration. The recorder contains an internal GPS receiver which is used to provide position data as well as a universal time code (UTC). This UTC is used to time-tag all data collected by the Firefly recorder. For the JADS test, the Firefly recorder was intended to collect INS data from the avionics bus and two types of data from the EW bus. These data collected from the EW bus included data from the ALQ-131 pod transmitted by the 1553 interface card and from the ALR-69 RWR. The RWR data were used to characterize the RF environment as seen by the test aircraft.

The measurement requirements for the Firefly recorder are as follows:

- Aircraft INS with a 20 hertz (Hz) update rate and a latency less than 50 ms
- Record all EW bus traffic with minimal errors and at the full available rate
- Time tag all bus data with a UTC time-tag with an accuracy and resolution less than 10 ms

2.5.4.1.3.2.3 Southwest Research Corporation 1553 Interface Card

The 1553 interface card serves as an interface to collect digibus messages transmitted by the ALQ-131 pod and transmits them externally over a MIL-STD-1553 serial bus. A special load of the operational software for the ALQ-131 jammer pod is required to activate this instrumentation. Data collected over this interface include commanded jammer technique assignments. The 1553 interface cards do not provide a time-tag for any collected data. Therefore, a time-tag must be supplied by an external recorder such as the Firefly recorder. The 1553 interface card was required to collect all jammer assignments reported by the ALQ-131 pod. These assignments included a list of technique identifiers assigned by the pod. Data latencies from the digibus to the external MIL-STD-1553 bus were required to be deterministic or exhibit less than 10 ms variance to be acceptable for the JADS test objectives.

2.5.4.1.3.2.4 RAJPO Pod

The RAJPO is a wing-tip mounted pod containing an internal GPS receiver, an INS, and a telemetry transmitter. This instrumentation used in conjunction with a ground-based GPS receiver provides an accurate position update for the aircraft using the differential GPS approach. Position and attitude data from the pod are transmitted to a telemetry ground station and merged with a ground-based GPS receiver to provide an estimate of GPS position. Position data are reported in latitude and longitude coordinates and altitude. A position update is required once every 50 ms. Aircraft attitude data are required to be reported at the same update rate and with a precision no worse than the test aircraft's internal INS.

2.5.4.1.3.2.5 ALR-69 Video Recorder

An onboard video recorder was used to document threat indications on the ALR-69 warning receiver to correlate this information with that collected at the ground sites. This information included threat symbology, approximate azimuth and range (based on power level) from the aircraft, threat mode changes, and jamming indications.

2.5.4.1.4 Go/No Go Criteria

A list of criteria was developed after risk reduction mission #2 to document which resources were essential to conduct the risk reduction and OAR baseline missions. This go/no go criteria addressed resources ranging from personnel to aircraft and range systems that would be required to conduct or continue a mission if certain assets failed or were not available. The list of go/no go criteria is at Appendix C.

2.5.4.2 HITL

2.5.4.2.1 System Under Test Configuration

The system under test configuration was an ALQ-131 Block II R/P ECM pod. The Digibus Traffic Monitor System (DTMS) replaced the ALQ-131 recorder card used in the OAR baseline phase. (The 1553 interface card was dropped from the instrumentation before the missions for record began.) The HITL test used the same OFP, the same limited threat detection preflight message tape (PT), and the same limited threat response message tape (MT) as used in the OAR baseline test.

2.5.4.2.2 AFEWES Simulator Configuration

Figure 4 illustrates the AFEWES test configuration in a block diagram format.

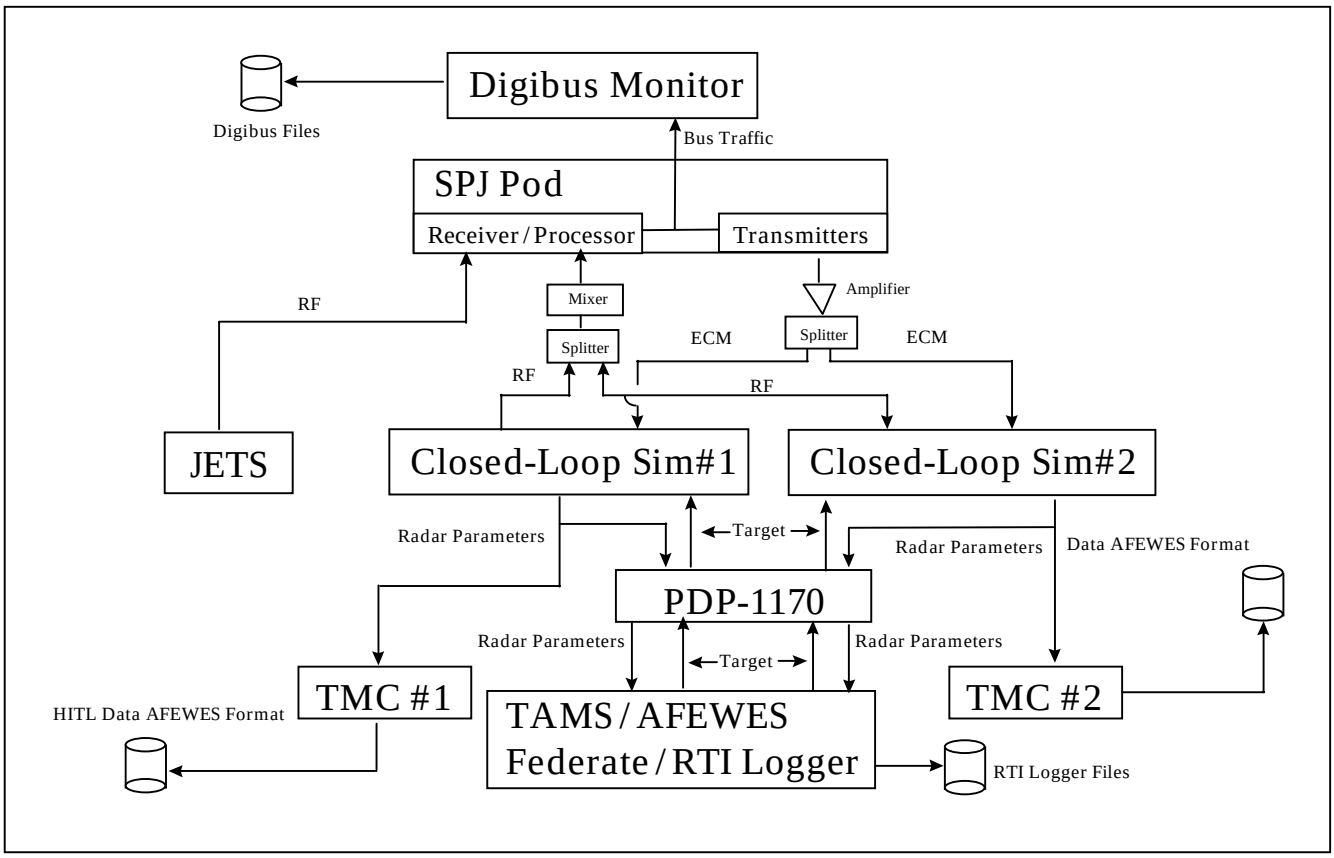

PDP = a type of computer equipment RTI = runtime infrastructure sim = simulation
SPJ = self-protection jammer

Figure 4. AFEWES Test Configuration

2.5.4.2.3 Instrumentation

2.5.4.2.3.1 Digibus Traffic Monitor System

The ALQ-131 Digibus Traffic Monitor System (DTMS) is a personal computer consisting of a Maxine printed wiring assembly (Maxine card); a digibus traffic monitor (DTM) card printed wiring assembly; an enhanced input/output (I/O) buffer (EIOB) module; various interconnecting cables and accessories; and specialized software. The DTMS was used as a digital instrumentation system for the jammer. This DTMS was integrated into the HITL test configuration for monitoring, displaying, and recording pod digibus traffic in real time. In addition, it controlled and nonintrusively monitored, displayed, and recorded pod operation in real time.

2.5.4.2.3.2 Aircraft

The aircraft represented in the HITL was a composite of position, attitude, and therefore, RCS. Aircraft position and attitude were recorded from the OAR TSPI and INS data and played back into the HITL environment in the form of a script. For selected threats, the script played back threat-centric tracking error measured in the OAR baseline. The TSPI position and attitude as a function of time must correspond to a real pass made in the OAR baseline to have maximum value

for correlation. The threat simulators responded to an RF signal that represented a theoretical reflection of the aircraft. The signal was built using the aircraft position and attitude in relation to the threat and an RCS value from a table. The signal was then modified to account for its distance and motion relative to the threat as well as the relationship between the threat antenna boresight and the aircraft position.

2.5.4.2.3.3 Threat Simulators

The AFEWES closed-loop, surface-to-air weapon system simulation for the HITL test consisted of an RF head; a tracking console; a software-programmable antenna pattern generator (SPAG) computer with customized software programs; and a master computer which provided overall real-time control of the target tracking simulation. The RF head simulates real-time echo signals. It also modulates and scales RF signals to simulate the effects of range, antenna gain patterns, and other factors in the radar range equation. The tracking console contains receivers, target tracking servocontrol systems, a system synchronizer, simulation displays, and man-in-the-loop radar operator controls. Antenna patterns were simulated on the SPAG computer through a table look-up process. The simulators used during this test were the SADS III, SADS VI, SADS VIII, and WEST X.

2.5.4.2.3.4. Tactical Air Mission Simulator (TAMS)

The TAMS data represented the aircraft platform consisting of TSPI, attitude, RCS, and the pod antenna patterns produced by the target generation software designated as the “platform federate” in the ADS phases of the EW Test. Additionally, there was graphic user interface (GUI) software that depicted the real-time aircraft flight profile and distances from the respective IP—south for northbound flights and north for southbound flights. The AFEWES software (threat simulations), developed to Phase 2 specifications, collected raw HITL data and formatted the data according to the JADS Phase 2 Interface Control Document (ICD). These data were collected using a JADS runtime infrastructure (RTI) interface logger. RTI logger files were processed into a comma-delimited format to provide input files for post-test analysis using the Automated Data Reduction Software (ADRS) tool.

2.5.4.2.3.5 Test Management Centers

The test management centers were used to collect data from the closed-loop simulators—the jamming-to-signal ratio (J/S), radar tracking error, and missile/projectile miss distance. Raw data collected during the HITL test were available for evaluation via digital strip chart printouts, graphics, miss distance calculations, and radar scope video tapes.

2.5.4.2.3.6 JammEr Techniques Simulator

The AFEWES JammEr Techniques Simulator (JETS) was used to provide background signals for the HITL test. Specifically, during the generation of closed-loop simulations of the SADS VIII and the WEST X, JETS replicated the RF signals of the SADS III and SADS VI emissions. During the generation of closed-loop simulations of the SADS III and SADS VI, JETS replicated

the RF signals of the SADS VIII and WEST X emissions. For the HITL test JETS did not generate ECM techniques (in accordance with the ROE for the Phase 1 baseline test).

2.5.4.2.3.7 Spectrum Analyzers

Spectrum analyzers provided a real-time qualitative assessment of jammer responses and threat emissions. Their primary function was to assess the threat simulators health during the runs to identify major problems that may be corrected quickly. The measurement requirement for the spectrum analyzers was to provide visual displays of emitter and ECM waveforms for real-time verification. Selected spectrum analyzer displays were recorded in the TMC to assist in post-test analysis.

2.5.4.2.3.8 AFEWES Facility Gateway Software (HLA/RTI logger)

The AFEWES gateway was composed of a high level architecture (HLA) interface and interfaced to the models and simulations within the AFEWES facility. This is not part of a standard HITL test. JADS selected the logger as the primary data collection point to avoid changing data analysis software to read standard HITL data formats. It was also implemented to reduce risk in Phase 2 execution. The logger resided in the interface between the AFEWES gateway and the RTI. The logger software recorded all function calls to/from the RTI along with all of the functional data parameters. The AFEWES gateway was set up to publish aircraft platform data consisting of altitude, attitude, roll, pitch and heading, velocity, location, and orientation even though there were no other federates subscribing to the data. This did not affect the logger, since the data were passed to the logger before they were passed to the RTI. When the federate published data, it called the RTI "updateAttributeValues" function. Another communication step was required with the logger-in-the-loop. When the logger was linked with the federate, the federate called the logger "updateAttributeValues" function. The logger stored the function identification and data in the log file buffer and then called the RTI "updateAttributeValues" function. When a log file buffer became full, it was written asynchronously to the log file and a new buffer was created. Upon completion of the HITL test, the log files were read and formatted with various custom programs to prepare the files for playback in ADRS. The create_adrs_file program read the log file data and created a comma-delimited text file that can be read by ADRS.

2.5.5 Constraints and Limitations

During the Phase 1 test design, JADS developed the EW Test by applying a set of goals and constraints relative to test content, cost, schedule, and personnel described in the EW APA. The net result of all the constraints is that the JADS EW Test represents a developmental test. However, none of the constraints in this phase prevent more dynamic tests from being replicated in an ADS environment. The major Phase 1 procedural constraints are listed in the bulleted paragraphs below. Other limitations related to program cost, schedule, and personnel follow.

- Phase 1 testing was restricted to a single test condition that could be replicated by equipment and facilities used in the later test phases. This was done to reduce variability of test

conditions to aid statistical correlation of results. Such a restriction would not be acceptable for an operational test designed to measure EW effectiveness, but aided in the assessment of ADS impacts.

- The OAR threat simulators were limited to four that AFEWES could replicate for Phase 2 and 3 comparisons.
- JADS restricted both the detection and response capabilities of the jammer. This reduced the variability in the response time of the ALQ-131 and the potential for erroneous threat identification or ECM technique selections.
- To avoid multipath transmissions and ground clutter, the test aircraft minimum altitude was restricted to 9,000 feet MSL for all data runs.
- ROE restrictions were imposed on the OAR threat operators to standardize system operation as much as possible for replication at AFEWES.
- To repeat the engagements from Phase 1 as closely as possible in later phases, each site operator's engagement windows were scripted.
- The same test aircraft were used on all OAR baseline missions to limit likely variations in target RCS. However, during two OAR baseline missions we were unable to secure a RAJPO pod for each wing tip.
- Jamming-to-signal ration (J/S) data were no able to be collected on the OAR. No adverse impact was evident since J/S information was subsequently calculated using HITL test data.

2.5.5.1 Cost

JADS had an established test budget and the Phase 1 test was developed within the budget. The resulting design represented the minimum jammer test required to evaluate the utility of applying ADS to EW T&E. The costs shown in Table 9 were incurred during the execution of this test phase. These costs include the unique instrumentation required to execute the test.

Table 9. Phase 1 Cost Summary

Cost Item	Amount
AATC (contractor salaries and travel costs) Note: $4 thousand (K) per flying hour was saved by using AATC resources	$60,000
Western Test Range Total	$351,500
• Risk Reduction Phase	$120,300
• OAR Baseline Phase	$231,200
AFEWES Total	$636,946
• HITL Planning and Execution	$515,593
• SADS VI Missile Flyout Planning and Execution	$121,353
Georgia Tech Research Institute Total	$924,797
• Test Support	$202,000
• RDAPAS and SASY Analysis Software	$24,238
• Automatic Data Reduction System Modification	$314,043
• OAR Analysis Software	$89,213
• ECM Technique Analysis	$4,361
• Pretest Analysis	$64,942
• ALQ-131 Instrumentation	$161,000
• 1553 Interface Cards and Firefly Hardware	$65,000
JADS Travel Note: JADS EW Test team travel costs were not tracked separately within the overall JADS budget.	*

2.5.5.2 Schedule

The primary schedule constraint associated with the Phase 1 effort was related to the schedule of the overall JADS EW Test program. The program has a finite end date and the risk reduction and OAR baseline missions were the basis for all subsequent testing. The flight testing and two-week AFEWES effort had to be completed by 30 September 1998 so as not to impact the start of Phase 2 testing. The original schedule optimistically called for risk reduction to be complete by November 1997. The problems typically associated with EW flight testing precluded completion until May 1998; some adjustments to the remaining flight test and HITL test schedules were required during Phase 1. Risk reduction missions could not be flown back-to-back because it was necessary to retrieve, reduce, analyze, and understand data from each sortie to make changes prior to the next sortie—the primary function of risk reduction. In some cases, new software programs had to be loaded to optimize ECM techniques, and mission results sometimes required other time-consuming adjustments prior to the next mission. OAR baseline flights were temporarily suspended in late July 1998 for the two-week HITL effort because the same ALQ-131 pods were required for both tests. OAR baseline missions resumed in August 1998 and were completed on 20 August 1998.

2.5.5.3 Personnel

Another constraint imposed on the Phase 1 test was to conduct the test program using current JTF assigned personnel augmented by experienced contractor and test facility personnel. Because of the relatively short, fixed period of the JTF, the initial cadre of military personnel, in many cases, was not replaced as some departed for other assignments. Additional contractor personnel were used to supplement some of these losses, but overall JADS test team manning to accomplish the necessary tasks was limited throughout the test and reporting period.

Personnel considerations at the test sites also created inherent limitations. The WTR threat operators supported other tests during the period of the JADS flight test and therefore worked shifts. As a result, the same operators were not always available to operate the same threat systems for each JADS mission. This changeover required JADS observers to rebrief the threat operators prior to each mission on JADS-unique rules of engagement, test objectives, and other JADS-unique aspects in order to maintain operating consistency on all missions. A limited number of personnel (threat operators) at AFEWES during the HITL effort was a contributing factor in determining the total number of threats that could be operated simultaneously. The desire was to have all four threat systems up at the same time to be consistent with the WTR operation. However, the systems were operated in pairs by the AFEWES operators while low fidelity simulation of the remaining two systems emissions were injected as background environment.

2.5.5.4 Threat Environment

2.5.5.4.1 Risk Reduction/OAR Baseline

The range threat environment for both risk reduction and OAR baseline flight testing were the same and represented very realistic systems with some limitations. An IADS-type environment could have been used to add realism to the environment but was dropped from the JADS test design for both cost and test simplicity considerations. The same was true for threat density. More terminal threats were available but not employed in the interest of keeping the AFEWES duplication of the range environment manageable. Of the four terminal threats employed, the SADS VI had the most significant test limitations on the OAR. This semi-active missile system was employed with very realistic acquisition, target track, and illuminator radar implementation; however, the AFEWES missile simulation was added to provide higher fidelity miss distance data. This combination provided JADS with the highest fidelity simulation for that threat system. This caused the engagements to be run twice, once on the OAR and once at AFEWES, to get complete engagements and produce miss distance. Cost limitations caused us to drop the actual shots taken on the OAR and use scripted shots at AFEWES. The script was based on the average firing range for valid shots taken at the OAR. The other three threats had no operational limitations significant to the JADS test.

2.5.5.4.2 HITL

The HITL threat environment was representative of the conditions set forth during the live flight portion of the OAR baseline testing. Although on the surface the circumstances at AFEWES were different, the ALQ-131 stimulation was comparable to all four simulators being active throughout the engagement run. The runs were set up using only two fully active threats with operators because of personnel limitations. The other two threats had their respective signals replicated by the JETS. Three of the four threats were fully manned for at least a week. The SADS VI only simulated a missile; there were no operators involved. Additionally, realistic flyout models were used for the missile engagements.

2.5.5.5 Instrumentation

2.5.5.5.1 Risk Reduction/OAR Baseline

The various range and aircraft instrumentation systems generally provided adequate data to assess the JADS MOPs with some limitations. The major aircraft limitations are noted in the following paragraphs. Detailed range instrumentation limitations are listed in Appendix E. Once the limitations were known, JADS determined that all of the known and expected variance sources between the OAR baseline and the ADS-based tests could not be resolved. Therefore, JADS designed and executed a HITL test to isolate the ADS-induced variance from the facility differences.

2.5.5.5.1.1 ALQ-131 Recorder Cards

The recorder cards provided the correct data types and the emitter track file updates, and jamming assignments were collected successfully. The time resolution was adequate; however, the accuracy was unacceptable during all test missions. JADS was unable to accurately characterize the time drift over a single mission of the recorder card time source. It varied by several seconds from one mission to the next. The initial time injection was unreliable as well. Initially, the method used to perform this injection was to enter a time on a personal computer (PC) keyboard based on a time display seen on a hand-held GPS receiver. This method introduced errors on the order of one second. A direct injection method was attempted using equipment provided by AWC. Unfortunately, however, it was determined that this equipment was faulty and could not be used. Because of these problems, timing response data were not collected on the range. However, the timing MOPs were so important that this lack of data was the genesis of the HITL test. The timing MOPs were subsequently evaluated at AFEWES during the HITL test and finally during the SIL test at AWC.

2.5.5.5.1.2 1553 Interface Cards

Significant limitations with these interface cards made them unusable for JADS purposes. The 1553 interface provided inaccurate data with intolerable latencies. The software required to report jammer activity to the 1553 interface was executed at the lowest priority in the pod

software. This contributed to data collection latency that varied from 3 to 12 seconds. In some instances when the number of active threats exceeded one, data were lost entirely over this interface. In addition, the 1553 recording process was intrusive to normal pod operations because of the way the jammer operational software reported jammer technique data. Prior to learning this, JADS contracted with GTRI to build a set of these cards. After getting the drawing package from WR-ALC, GTRI fabricated the cards, but they did not pass functional checks performed by GTRI.

2.5.5.5.2 HITL

2.5.5.5.2.1 Digibus Traffic Monitor System

The ALQ-131 Digibus Traffic Monitor System displayed ALQ-131 R/P responses to the threat simulators in real time - both threat detection and mode change activity. The DTMS was synched to an Inter-Range Instrumentation Group (IRIG)-B time source, and it provided accurate jammer activity files to within one ms. A jammer activity file recorded the jammer's threat activation, jammer threat identification and jammer response times. These files were one of two input files required to generate the HITL data. The other source was the RTI interface logger files collected within the AFEWES gateway.

2.5.5.5.2.2. Tactical Mission Simulator

The TAMS graphically displayed the simulated aircraft throughout each engagement run while the recorded aircraft composite information was played back at 20 Hz. Occasionally, the aircraft stopped moving along the intended flight path, but normally, the aircraft script (flight profile) loaded and the aircraft flew as scripted. After aborted runs for any type of failures, subsequent reruns of the script were successful. TAMS also functioned as the test control station during each run. The AFEWES test controller used the displayed range from IP to identify state changes of the simulators—the "on" and "off" commands. This procedure worked well as long as the test controller was attentive in following the site controller's matrix and observing the range changes on the computer display.

2.5.5.5.2.3. Test Management Centers

The TMC threat simulator parameter strip charts were an invaluable real-time analysis tool. The capability to view printouts of tracking error proved beneficial in troubleshooting algorithms used to calculate aircraft position at the time of engagement—the simulator's view of the engagement. Additionally, the strip charts provided direct feedback for a "valid" engagement. The TMC also depicted a two-dimensional view of the engagement and recorded the simulator's threat scopes. However, there was a miscommunication or misinterpretation of the "common time" required to facilitate post-test analysis. JADS required that all data sources, including video, have a single reliable time reference. Given our architecture within the AFEWES facility, they were not adequately set up to fulfill our request. Although AFEWES had the capability, the TMCs were not wired to handle a time source. However, by the second day of testing, GPS time was transmitted to each recorded display. AFEWES placed a camera in front of the GPS display and

sent the video (of the time) to the TMCs. They superimposed the time video onto the recorded displays. This method proved to be a workable alternative.

2.5.5.5.2.4. JammEr Technique Simulator(JETS)

JETS simulated the RF signals of the nonparticipating threats for the two weeks of testing. A spectrum analyzer monitored the waveforms for proper turn-on and turn-off times and for the appropriate RF signal during each run.

2.5.5.5.2.5. AFEWES Software

Upon post-test review of the HITL data, there were numerous data elements consistently missing from the runs and a problem with the relative location of the aircraft position. The AFEWES software did not publish the prescribed modes and codes detailed in the ICD. The modes and codes identified the threat systems and the current state of each. These data were transmitted from the threats correctly, but the software failed to accept the threat states and publish the corresponding modes and codes. These shortfalls were corrected, and the recorded HITL data from the AFEWES optical disk format were reprocessed through the amended software and recorded by the RTI interface logger.

2.6 Scheduling

2.6.1 Risk Reduction

The original risk reduction schedule called for six missions to be flown between August and November 1997. Flight testing did begin on 27 August 1997 with the first mission; however, technical problems with the ALQ-131 OFP, instrumentation, and ECM technique response software programs delayed the second mission until 18 November 1997. Similar problems combined with test range and AATC scheduling conflicts, asset nonavailability, and data delivery problems continued to cause delays in mission scheduling throughout the risk reduction phase. The sixth and final risk reduction mission was flown on 20 May 1998.

Table 10 summarizes the chronology of the major scheduled events during this portion of Phase 1 testing.

Table 10. Risk Reduction Schedule History

Mission Date	Flown	Canceled	Comments
28 Aug 97	1 Hr.		1st risk reduction sortie. 2 F-16s versus SADS II, III, VI, VIII and WEST X. 1 wet and 2 dry runs. Only mission against SADS II. AATC profile also flown.
15 Sep 97		X	Late data receipt (8 Oct) from the WTR for 28 Aug mission caused JADS cancellation.
7 Oct 97		X	WTR had range time available, but test aircraft was unavailable.
18 Nov 97	2 Hr.		2nd risk reduction sortie. 2 F-16s versus SADS III, VI, VIII and WEST X. 14 wet and 4 dry runs.
3 Dec 97		X	Late data receipt (15 Dec) from the WTR for 18 Nov mission caused JADS cancellation.
28 Jan 98	1 Hr.		3rd risk reduction sortie. 1 F-16 (A/C #1262) versus 4 threats. 8 wet and 4 dry runs.
17 Feb 98		X	Originally scheduled by the range but canceled due to a higher priority mission
25 Feb 98	1 Hr.		4th risk reduction sortie. 1 F-16 (A/C #1180) versus 4 threats. 7 wet and 4 dry runs.
17 Mar 98		X	Scheduled range time canceled; new ALQ-131 mission tape not ready. Also A/C #1180 had delaminated canopy and A/C #1262 was in phase inspection.
19 Mar 98 20 Mar 98 2 Apr 98 7 Apr 98		X	These dates had available range times scheduled at the WTR but were never placed on the AATC mission schedule. An Air Combat Command project order required for AATC to fly JADS missions was in coordination from 11 Mar-8 Apr 98.
21 Apr 98		X	Scheduled by range; not placed on AATC schedule - range time was too early (0700-0900) for AATC to support.
28 Apr 98	1.5 Hr.		5th risk reduction sortie. 1 F-16 (A/C #1262) versus 4 threats. 9 wet and 5 dry runs.
29 Apr 98		X	Scheduled by range; not placed on AATC schedule because AATC deputy commander for operations limited JADS support to one mission per month during April and May.
7 May 98		X	Scheduled range time was taken by a higher priority user.
19 May 98		X	Scheduled by range; not placed on AATC schedule - range time was too early (0900-1030) for AATC to support.
20 May 98	2 Hr.		6th and final risk reduction sortie. 1 F-16 (A/C #1262) versus 4 threats. 14 wet and 6 dry runs.

2.6.2 OAR Baseline

Fourteen productive range hours were planned to be flown to complete the OAR baseline test following the six risk reduction missions which ended in May 1998. In actuality, some of the data collected during risk reduction missions #5 and #6 were included in the OAR baseline database because the test profile, ROE, and test conditions had been stabilized sufficiently to make these data usable for record. The first dedicated OAR baseline mission was flown on 8 June 1998. Some of the same scheduling/execution problems experienced in risk reduction continued to plague the OAR baseline planning and some missions flown were marginally productive. All of these problems together resulted in a total of 17 OAR baseline missions of 1.5 to 2.0 hours of

range time being scheduled and seven missions actually being flown. The total number of range hours (including 3.5 hours from the last two risk reduction missions) was 14.4 hours. The final OAR baseline mission was flown on 20 August 1998.

Table 11 summarizes the chronology of the major scheduled events during this portion of Phase 1 testing.

Table 11. OAR Baseline Schedule History

Mission Date	Flown	Canceled	Comments
28 Apr 98	1.5 Hr.		(Risk reduction MSN) Some data valid for OAR database. 10 wet, 4 dry runs.
20 May 98	2 Hr.		(Risk reduction MSN) Some data valid for OAR database. 10 wet, 4 dry runs.
8 Jun 98	2 Hr.		21 runs (16 wet, 5 dry). Numerous late test condition calls and pilot problems.
15 Jun 98		X	Not accepted by AATC - take off time too early to get aircraft support at Tucson.
16 Jun 98	1.5 Hr.		17 runs (11 wet, 6 dry). Some problems with SADS III and SADS VI.
17 Jun 98	1.3 Hr.		15 runs (11 wet, 4 dry). Aircraft forced to climb to 15K feet by range safety.
19 Jun 98		X	Canceled due to problem at range. AATC unable to replan mission in time.
23 Jun 98	1.7 Hr.		18 runs (12 wet, 6 dry). Some problems with SADS III and SADS VI.
2 Jul 98		X	Canceled on day of mission due to SADS III magnetron arching.
9 Jul 98	1.1 Hr.		Troubleshooting MSN to isolate a spurious signal. Backup ECM pod #0631.
11 Aug 98	*		* MSN given to AATC for their ALR-69 software test. No JADS data collected.
14 Aug 98	1.8 Hr.		20 runs (17 wet, 3 dry). Isolated spurious signal associated with SADS VI.
17 Aug 98		X	Canceled just prior to take off at Tucson due to F-16 leading edge slat inoperable.
20 Aug 98	1.5 Hr.		17 runs (13 wet, 4 dry). SADS VI inoperable for 1st 9 runs, then slaved to Target Acquisition and Tracking System (TATS).

2.6.3 HITL

Table 12 summarizes the HITL event history.

Table 12. HITL Event History

Scheduled Date	Actual Completion Date	Event	Comments
4 Jun - 22 Jul 98	23 Jul 98	Prepare Flight Profile Tapes (AFEWES)	MSN 5-10 completed 19 Jul MSN 11 included late, 22 Jul 98
18 May - 17 Jul 98	17 Jul 98	Test Plan Notes (AFEWES)	
20 - 24 Jul 98	21 Jul 98	ECM Pod Set Up (AFEWES)	
20 Jul 98	20 Jul 98	JETS Set Up (AFEWES)	
20 -24 Jul 98	19 Jul 98	SADS VIII and WEST X Set Up (AFEWES)	
27 -31 Jul 98	31 Jul 98	SADS III and SADS VI Set Up (AFEWES)	
27 -30 Jul 98	30 Jul 98	Execute HITL Part 1 (AFEWES)	
3 -6 Aug 98	7 Aug 98	Execute HITL Part 2 (AFEWES)	Lost one day of testing for sim problems
15 Aug 98	15 Aug 98	HITL Quick-Look Report	
10 Aug - Sep 98	pending	Data Reduction (AFEWES)	Week 1 data retrieved from optical disk
Oct - Dec 98	pending	ADRS MOP Evaluation (JADS)	5 MOPs not coded correctly in ADRS software

3.0 Execution Results

3.1 Risk Reduction Execution

The risk reduction flights had many objectives to accomplish using a fly-fix-fly approach to the missions. The following items were of major interest and changed, sometimes significantly, over the period the risk reduction missions were flown.

- Flight profile
- Threat engagement regions
- ECM PT/MT parameters
- Situational awareness
- Test control
- Instrumentation
- Data collection methods
- Jammer performance
- Threat performance
- Rules of engagement
- Analysis process development and execution
- Threat system orientation/performance awareness

3.1.1 Mission #1, 28 Aug 97

OVERVIEW: Mission #1 was expected to yield some initial data to begin the analysis process execution, familiarize the participants with the OAR test control facilities, and test the jammer and threat performance and interactions using the flight profile and engagement regions designed at that point.

POSITIVE RESULTS: Once the test team arrived, an initial familiarization of the test control facility took place. The test team became acutely aware that situational awareness (SA) during the test was of paramount importance and needed extra attention. The flight profile and engagement regions were tested but needed improvement (see below). The jammer and threat interactions were also tested and showed that they also needed extra attention.

ROOM FOR IMPROVEMENT: Unfortunately, the mission failed to meet most of the objectives. There were many problems just getting the personnel to the range and into the right areas. The jammer instrumentation was not working as expected and did not provide any data to evaluate the jammer performance. While the mission was flown, it was noted that the WEST X had trouble engaging the target, and the racetrack flight profile was inadequate for the purposes of the EW Test. Problems were found in the flight profile, threat system orientation/performance awareness, threat engagement regions, ECM PT/MT parameters, test situational awareness, test control, data collection instrumentation, and threat performance.

3.1.2 Mission #2, 18 Nov 97

OVERVIEW: While waiting several months for another mission to be flown, the data collection methods were modified to streamline the process of data delivery from the OAR. Changes were also made to the areas mentioned in Mission #1.

POSITIVE RESULTS: The mission was flown, and the threat and jammer interactions improved and produced better jammer and threat performance results. The implementation of site observers took place during this mission and showed a remarkable improvement in effective test situational awareness. The changes in test control also resulted in marked improvement in effectiveness, and the personnel issues of getting the right people to the right mission locations ran much more smoothly.

ROOM FOR IMPROVEMENT: While the mission was flown with the improvements mentioned above, several new problems to be worked were identified. The site observers did not receive an adequate orientation to the mission control room, which caused a loss of situational awareness during the first several runs during the mission. There were also problems in following the rules of engagement because the operators were using unauthorized (not in accordance with the JADS ROE) modes that could not be duplicated in our ADS environment, and the threats were not engaging the target at the specified times as designated by the mission control. There were also problems in the instrumentation performance of the RAJPO pods. They did not perform well during the entire mission. Also, one of the two ALQ-131 pods was not performing correctly and needed to be reset during the mission execution. There were still problems noted in situational awareness, test control, data collection instrumentation, data collection methods, jammer performance, threat performance, and rules of engagement.

3.1.3 Mission #3, 28 Jan 98

OVERVIEW: Because of the holiday schedule and the delay in the delivery of the range data to JADS, this mission took place 10 weeks after the previous one. The ROE had been modified, as well as the mission tape used in the pod. The mission was more successful than the previous two missions, but there were still many problems to be worked.

POSITIVE RESULTS: The data collected from the mission were more accurate and reliable than on previous missions, and the new and improved observer assignments were handled more expertly to provide better test control and situational awareness. The aircraft, jammer pod, and Firefly instrumentation seemed to have minimal problems, but new problems surfaced with regard to aircraft profile, ALQ-131 recorder card accuracy, and threat engagement regions.

ROOM FOR IMPROVEMENT: While ALQ-131 pod data were collected, the issue of the accuracy of the recorder card clock came under serious scrutiny. The ALQ-131 recorder card showed a drift in the timing clock of several seconds, which invalidated the timing MOP data gathered from the mission. The aircraft profile caused a lot of problems for the threats engaging the target because of ground clutter. What resulted was a series of breaklocks and poor tracking that was not due to the jammer pod, but from ground clutter instead. The mission tape flown in

this mission also showed the jammer tracking other radar emitters which were not programmed for the EW Test. This may have impacted the workload on the jammer pod. As a result, it was decided to use a specialized mission tape created solely for the JADS EW Test. RDAPAS instrumentation had failed at the SADS III, which prevented the collection of J/S data for the site, and SASY instrumentation failed causing a decrease in situational awareness of the RF environment. The final analysis of the range data provided a first look into a full mission data analysis process, where lack of familiarity with the data reduction software, ADRS, was a big problem. It was evident that more training on the use of ADRS was required, and GTRI provided on-site support to help resolve this problem. The threat observers, while now more familiar with the mission control center (MCC) were not able to detect when a threat was or was not performing as prescribed by the ROE, which also affected the results of the mission data. Problems were noted in the areas of flight profile, threat engagement regions, ECM MT parameters, analysis procedure development and execution, and threat system awareness.

3.1.4 Mission #4, 25 Feb 98

OVERVIEW: Four weeks had passed since the previous mission, so, once again, the operators were not familiar with the ROE. ROE had been revised, the observers had become more aware of the threat system operations, the flight profile and threat engagement regions had been modified, and a new mission tape had been loaded in the jammer pod. All of these changes demonstrated that JADS intervened to solve previous problems, and once again, gave opportunity for new problems and issues to arise.

POSITIVE RESULTS: The JADS team held a meeting with the threat operators prior to the mission to discuss the peculiarities of each threat system and how each system engaged the target. This meeting greatly improved observer awareness of the threat system, but still left some ambiguity as evidenced from some operator comments. The agreement at this meeting was made for the operators to actually host the observers at the threat site to improve situational awareness. The new mission tape decreased the opportunity for extraneous emitters to affect the test execution. The flight profile was raised to 9000 MSL, and coupled with the new threat engagement regions, the ability for the threats to engage the target were maximized compared to all previous missions. A new procedure had been developed at AATC to improve the timing accuracy of the ALQ-131 recorder cards.

ROOM FOR IMPROVEMENT: While this mission was better executed from a mission control standpoint and the best results were collected compared to any previous missions, there were still problems to be worked in many areas. The mission tape parameters had not been finalized against the WEST X, which made the data unusable for the OAR baseline data population. The ALQ-131 recorder cards still had a timing accuracy problem. This problem resulted in the cards being sent to the manufacturer for check-out. The Firefly instrumentation had another failure in the 1553 card, which resulted in no data being gathered on the jammer pod from the Firefly. This second failure of the 1553 card coupled with other tests and research performed, caused the 1553 card to be dropped from the instrumentation configuration altogether. It appeared that not only did the 1553 card have sporadic performance, it also affected the performance of the jammer pod. However, the complete analysis process was executed with GTRI support and resulted in more

improvements made to the ADRS. The RDAPAS instrumentation failed on the SADS VIII system, which caused a total loss of J/S data on the SADS VIII for the mission. Problems were also noted in the areas of ECM mission tape parameters, analysis process execution, instrumentation, data collection methods, rules of engagement, and threat system awareness.

3.1.5 Mission #5, 28 Apr 98

OVERVIEW: This was the first mission counted toward the OAR data population. The reference test condition (RTC) had been finalized with respect to flight profile, threat engagement regions, ECM PT and MT parameters, instrumentation, and rules of engagement. The finalization of these RTC areas resulted in an orderly mission execution. There were also improvements in the data collection process.

POSITIVE RESULTS: This was the first mission where the observers performed their job on-site at the threat site (except the WEST X). This improved situational and threat performance awareness and allowed for a great deal of observer/operator interactions for the JADS team members to become aware of the operations of the threat systems. While this mission was initially reported as marginally productive, changes in the interpretation of the SADS VI data revealed this mission to be more useful than originally expected. The modified ROE allowed the WEST X to have a better engagement with the target on the northbound runs. This proved the flight profile and threat engagement regions were adequate enough to provide reasonable and repeatable data. The interactions between the WEST X, SADS VIII and jammer were clearly seen in the results. This proved the PT and MT parameters were performing as designed and finalized. The elimination of the Southwest Research 1553 card allowed for more consistent jammer performance against the threats.

ROOM FOR IMPROVEMENT: While the observers and operators had more interaction, the new environment proved disturbing to some observers. The confusion resulted in improper engagements for the SADS VI for most of the mission. This necessitated an earlier arrival time for observers at the threat sites in future missions to coordinate the ROE. It was also noted that observer communications to the MCC could be improved to allow for a better real-time assessment of the mission execution. The SADS III had a communications failure that did not allow it to engage the target for 8 of the 14 runs in the mission. This was a hardware problem that was resolved by the OAR personnel prior to the next mission. The RDAPAS systems failed at least once for each instrumented threat during the mission. The pilot used a noninstrumented switch to inhibit pod radiation for dry runs, which caused confusion in the data reduction results. This mode had been deleted previously, and it was reiterated to the pilot to turn the pod to STANDBY mode, not INHIBIT mode. Problems noted from this mission were in the areas of situational awareness, test control, and data collection methods.

3.1.6 Mission #6, 20 May 1998

OVERVIEW: This was the second mission where data were used in the OAR baseline population. With the changes made in the areas noted from the previous mission, this was the most successful mission to date.

POSITIVE RESULTS: The observer team had adjusted their schedule to arrive at the threat site early enough to brief the operators on the ROE and answer any questions about the day's mission. This resulted in better compliance by all threats from the ROE standpoint. The OAR personnel also set up an observer net specifically for the observers to communicate their issues to the MCC. This setup allowed the head observer in the MCC to keep in touch with the observers during the mission and resulted in much better test control and situational awareness for both the observers at the threat sites and the test controllers in the MCC. All threats had valid engagements with the target. The full analysis process was exercised and sample MOP data were gathered for all MOPs except the timing MOPs (correct threat identification (ID) response time and correct ECM selection technique response time). The analysis process had also been improved to include screening criteria for runs that met the reference test condition. With these improvements, the data used for the OAR baseline population were collected and analyzed according to the applicable part of the correlation process procedures. The missions conducted after mission #6 were all slightly improved as the operators, observers, and test control team became more aware of threat operations and were able to identify system anomalies in real-time vice post-test analysis.

ROOM FOR IMPROVEMENT: The SADS III had a system failure and was down for the first six runs of the mission. The problem was solved after run 6, but the threat still had trouble acquiring the target on some runs. There was still room for improvement with the SADS VI operations. The threat was having trouble maintaining a track on the target on 4 of the 20 runs. The ROE were reiterated to the threat operators to help them understand that the EW Test was structured to minimize the operator interactions with the target and to maximize the interactions between the threat and the jammer pod. The jammer performance against the SADS III looked irregular because SASY showed intermittent jamming throughout the day. The jammer performed well against the other threats. This problem was carried through to the next mission and was later addressed after mission #9. There was also a problem with extraneous emitters radiating during the test execution. While the emissions of an unplanned emitter did not affect the jammer, they did interfere with the acquisition radar of the SADS VIII causing some engagements to be shorter than others. This problem was rectified by the program manager at the OAR, and the unplanned emitter was shut down after 10 minutes of radiating. This was the final risk reduction mission, and the problems encountered seemed to be more due to the procedures and policies at the OAR than in the processes controlled by JADS. The improvements after this mission were changes in the analysis process, test control, and situational awareness. The RTC did not change after this mission, and all successive missions were counted toward the OAR baseline data population.

3.2 OAR Baseline Execution

The basic objective of the OAR baseline missions was to collect baseline ALQ-131 effectiveness data to answer the MOPs (listed in Table 1) for comparison with results that will be obtained from Phases 2 and 3. These data were collected during missions 5 through 13 of the OAR baseline phase. The following table provides a summary of the mission productivity during the OAR baseline testing. This table shows the total number of runs attempted during each mission, and the subset of usable data runs achieved by each threat. The difference was due to threat equipment failures, invalid reference conditions, and runs with no data recorded. Risk reduction missions #5 and #6 are included because OAR baseline data for record were taken from portions of these missions.

Table 13. OAR Baseline Mission Summary
(Number of Usable Data Runs by Threat)

Threat / Mission	SADS III	SADS VI	SADS VIII	WEST X	Average Success Rate
Mission (# total runs)	Number of usable data runs				
Mission 5 (14 runs)	6	12	13	13	79%
Mission 6 (20 runs)	13	16	20	15	80%
Mission 7 (21 runs)	19	16	20	19	87%
Mission 8 (17 runs)	15	8	17	17	84%
Mission 9 (15 runs)	4	4	4	4	27%
Mission 10 (18 runs)	18	18	17	18	99%
Mission 11 (13 runs)	11	11	12	10	85%
Mission 12 (20 Runs)	14	14	18	20	83%
Mission 13 (17 Runs)	16	0	17	17	74%
# total runs (155 attempted)	116	99	138	133	78%

There are four items to highlight from this table. The overall mission productivity was about 78%, but the reliability of individual threat simulators varied quite a bit. This was mostly due to random mechanical failures at the threat sites on different days, lightning/weather-related down times at individual sites, and occasionally because of communication failures from the control center. (Examples: the missile simulation system crashed at one site for 6 runs; the communications link was down from MCC to one site for 6 runs; a lightning storm near one site caused it to shut down for 6 runs; a recorder broke at one site for the last 9 runs) These types of

equipment failures and weather delays automatically caused a run to be bad because no data were produced.

The next notable item was the low production on Mission #9. Only 4 of the 15 runs were usable, because 11 of the profiles varied from the reference test condition. The test range had an explosives project underway at the south end of the JADS profile which required the pilot to climb from 9000 to 15000 feet during the last 11 runs. This climb and descent during the runs significantly changed the apparent radar cross-section and therefore changed the radar tracking performance. Thus, 11 runs were deemed invalid on Mission #9.

Another notable item was related to the SADS VI. On Mission #13, the target tracking radar had a mechanical failure and was not able to track the aircraft on its own that day. The site was only able to slave its antenna to an external source but still did not provide valid data. Therefore, none of the 17 runs from SADS VI were usable on Mission #13, which lowered its overall productivity to 63% during the OAR baseline phase. (If those runs had been good, the SADS VI would have had a 74% productivity rating.)

The next section will discuss the OAR baseline data collection and results for each of the ten measures of performance that were described in Table 1. The JADS EW Test team had the function of characterizing all of the data collected, while GTRI provided all of the statistical analysis for MOP results. For each OAR threat system, there are four run condition categories for which MOPs will be evaluated: northbound dry (ND), southbound dry (SD), northbound wet (NW), and southbound wet (SW). However, not all MOPs can be calculated for every summary condition or for every threat. Table 14 shows the MOPs collected for each threat and condition.

Table 14. EW Test Measures of Performance

MOP	Conditions	SADS III	SADS VI	SADS VIII	WEST X
Correct threat ID	NW,SW	X	X	X	X
Correct threat ID response time*	NW,SW				
Correct ECM technique selection	NW,SW	X	X	X	X
Correct ECM technique selection response time*	NW,SW				
Jamming-to-signal ratio versus threats**	NW,SW				
Increase in tracking error versus threat	ND+NW SD+SW	X	***	X	X
Number of breaklocks	ND,SD NW,SW	X	***	X	X
Reduction in engagement time	ND+NW SD+SW	X	***	X	X
Reduction in missiles launched	ND+NW SD+SW	X	X	X	
Missile miss distance	ND,SD NW,SW	X	X	X	

* These response time MOPs were not computed in the OAR baseline test because of inaccurate timing instrumentation on the jamming pod. The missing data were later obtained via the SIL test at Eglin AFB in September 1998.

** The jamming-to-signal ratio data were not collected in the OAR baseline test data because of problems with instrumentation.

*** These MOPs for the SADS VI were not computed because there is no SADS VI target tracking radar (TTR) implementation at AFEWES to compare to the OAR baseline data.

3.2.1 Correct Threat ID

The correct threat ID MOP measures the accuracy of the jammer's ability to correctly identify a threat system as the threat begins radiating the target. Only wet run data were analyzed for this MOP. Three conditions had to be met for the jammer to provide a threat ID.

- The threat must be radiating in a mode that the jammer is designed to detect,
- The threat composite angular tracking error must be below a user-defined threshold (for the JADS EW Test this threshold was half a beam width for each threat) for a time greater than the expected response time, and
- The threat must be within the jammer detection range for a time greater than the expected response time. Since the JADS RTC assumes condition three will be met at all times, the detection range threshold is set to infinite range.

Each usable wet run provided at least one chance for a correct threat ID. The sample size for this MOP was at least the number of usable data runs from each threat when the ALQ-131 was on. There were adequate samples for correct threat ID.

3.2.2 Correct Threat ID Response Time

This MOP was designed to measure each time a correct threat ID was recorded in the receiver processor of the jammer. Specifically, this MOP measured the time taken to correctly identify a threat from the time when a threat radiated and was satisfactorily tracking the target to when the receiver processor reported the correct ID.

This MOP could not be evaluated during the OAR baseline because of inaccurate timing instrumentation on the jamming pod.

3.2.3 Correct ECM Technique Selection

A correct ECM technique selection was defined as the selection of the correctly programmed ECM technique against a threat. To assess correct ECM technique selection accuracy, the only condition that must be met for the jammer and RTC was that a correct threat ID must exist for an amount of time greater than the minimum ECM response time. If the jammer correctly identifies the threat, ADRS checks to see if the ECM technique selected matches the expected technique

number in the emitter descriptor file. If the jammer does not correctly ID the threat, an incorrect ECM technique selection is not counted against the jammer's performance.

3.2.4 Correct ECM Technique Selection Response Time

A correct ECM technique response time can only be measured when a correct ECM technique selection has occurred. To assess correct ECM technique selection accuracy response time, two conditions had to be met.

- A correct ECM technique must be selected, and
- The threat composite angle tracking error must be no more than a half beam width from the target for an interval of time greater than the expected ECM response time.

This MOP could not be evaluated during the OAR baseline because of inaccurate timing instrumentation on the jamming pod.

3.2.5 Jamming-to-Signal Ratio Versus Threats

Jamming-to-signal ratio (J/S) is defined as the measure of jamming signal strength divided by threat signal strength. The goal of this MOP was quantification of the J/S over the engagement. J/S was collected as time-series or type 3 data and converted to type 1 data for analysis.

The J/S data were not able to be collected in the OAR baseline test. The test range RDAPAS instrumentation had been planned to be used for extracting J/S data. RDAPAS had never been used for this application, however, it is similar to instrumentation at the Eglin range that is used for this purpose. GTRI designed the Eglin instrumentation and agreed to attempt to extract J/S from RDAPAS data. Data formatting problems had to be resolved before J/S could be extracted. These problems consumed several months and the entire budget for this task. More funds were allocated, the formatting problems were resolved, and software was created. The results produced erratic J/S from the RDAPAS data. Investigation by GTRI and the WTR revealed that the RDAPAS instrumentation was being operated in a nonlinear area of its response curve. This precluded accurate (within 2 decibel [dB]) calibration. Rather than redesign the RDAPAS, JADS elected to drop J/S as a MOP from the OAR baseline test.

3.2.6 Increase in Tracking Error Versus Threat

This MOP involved a comparison of tracking error against a target between wet and dry runs with the goal of quantifying the percentage difference between wet runs and an established dry run baseline. Tracking error data were collected as time-series or type 3 data and converted to type 1 data for analysis. The tracking error values were taken directly from the target tracked position file delivered from the OAR. To collect tracking error data, a good track must be established. Good tracks are established when:

- The tracking error is below the threshold,
- The threat is operating in a good track mode, and
- The operator maintains that good track for a continuous two seconds

3.2.7 Number of Breaklocks

This MOP produces type 1 data. The goal of this MOP was quantification of the number of breaklocks per run for both wet and dry engagements.

In order for a breaklock to occur, the threat must transition from a good track mode to a bad track mode after the first good track is established. Two conditions must be met for the establishment of a good track.

- The tracking error must be beneath the tracking error threshold for a user-definable time period (usually 2 seconds), and
- The threat must switch into its good track mode (AUTO mode).

Following the establishment of a good track, a breaklock occurs when either or both of the following conditions are met.

- The tracking error exceeds the threshold for a user-definable time period, or
- The threat must switch from its good track mode into another radiating mode.

A breaklock does not occur at the end of the run when the threat transitions to “off” mode.

3.2.8 Reduction in Engagement Time

This MOP involves a comparison of good engagement time between wet and dry runs with the goal of quantifying the percentage difference between wet runs and an established dry run baseline. Percentage of good engagement time is defined as the percentage of time a threat is in a good track mode compared to the total engagement time. Good and total engagement time definitions vary for specific threat systems.

Total engagement time for the SADS III and SADS VIII is the total time the threat is radiating in a mode which is expected to be jammed by the ALQ-131. Good engagement time for these threat systems is the total time a threat is in AUTO mode and tracking error is below the threshold for at least a user-definable time period. AUTO mode is defined as the threat system radiating with both auto angle and auto range track loops engaged. All other radiating modes are not good track modes.

For the SADS VI, engagement time can not be calculated because there is no good track mode designation for the missile seeker modes.

Total engagement time for the WEST X is defined as the total time the threat is activated.

NOTE: Since the AFEWES implementation of the WEST X does not deactivate at the end of the run, ADRS must adjust the total engagement time to eliminate the last segment of the TO ECM OFF mode when seen in the AFEWES data. Good engagement time for the WEST X is defined as the time when the threat is radiating in AUTO mode and the tracking error is below the threshold for at least a user-definable time period.

3.2.9 Reduction in Missiles Launched

This MOP involves a comparison of the number of missiles launched between wet and dry runs with the goal of quantifying the percentage difference between wet runs and an established dry run baseline. The missile shot data are delivered from the OAR, and each recorded missile event is counted as a missile shot.

3.2.10 Missile Miss Distance

The missile miss distance MOP was calculated with the intent to characterize the threat's performance during both wet and dry runs. The missile shot data were delivered from the OAR for the SADS III and SADS VIII, and from AFEWES for the SADS VI, which included a single number for distance of closest approach to the aircraft.

3.3 HITL Execution

3.3.1 Day #1, 27 Jul 98

OVERVIEW: Day one of testing began with the SADS VIII and WEST X manned simulators while JETS replicated the RF signals of the SADS VI and SADS III. The data post-processing tool—ADRS—was not fully exercised because the initial log files sent to GTRI were missing critical threat performance data and had incorrect aircraft flight data. JADS also determined that AFEWES only had the input function of the logger input and output recording capabilities collecting data. The AFEWES software published the aircraft script and subscribed to the threat performance data. The logger was supposed to record both sets of data. AFEWES updated the logger software, and the testing began. AFEWES was able to record the threat simulator activity mode changes using their proprietary optical disk software in parallel with the RTI logger software. Because of our compressed preparation and execution schedule, AFEWES normal data collection method (optical disk) was our reliable backup system.

RESULTS: JADS executed 31 total runs and 25 were considered usable for analysis. As for the federate, there were other critical parameters missing from the logger files, but AFEWES changed their federate code, and all observable threat parameters were collected. Additionally, all data were later post-processed from the optical disk software and used for MOP analysis.

3.3.2 Day #2, 28 Jul 98

OVERVIEW: The HITL testing resumed data collection with the SADS VIII and WEST X manned simulators while the JETS replicated the RF signals for the SADS VI and SADS III. Data from OAR baseline mission 11 were processed by the Western Test Range and mailed to JADS earlier than expected. AFEWES was able to produce the aircraft scripts, and they were added to our HITL test matrix which bumped the run count up to 62. As for the simulators, the initial condition for the WEST X prior to tracking the target was about 180 degrees from the direction of the target aircraft—the simulator had problems acquiring and engaging the aircraft. The flight paths from south to north changed slightly for OAR baseline mission #7 which placed the aircraft reasonably above the threat and at an elevation and azimuth that caused the simulation to crash. These profiles contributed to a high number of breaklocks during the engagement too. Therefore, the flight profile was changed to accommodate the direction of these runs—problem solved. Another major item noted was the inability to time synchronize the data sources. The TMCs had an IRIG-B capability, but it was not operational. The time displayed within the TMC was time from zero. Once the TMC initialized and the runs began, the TAMS sent a start command to each TMC and the TMCs began recording. Each video display as well as the digibus monitor and logger files had different times. (The digibus and logger files received time from an IRIG-B source.) AFEWES corrected this problem by splitting and superimposing GPS time onto the videos in the TMC. However, the runs from day one did not have a suitable time source displayed on the videos for troubleshooting data anomalies.

RESULTS: JADS executed 51 total runs and 44 were considered usable for analysis. To assist with the problems associated with missing data, JADS sent AFEWES the newly created logger reader code that segmented the data into a format for ADRS and also displayed the data in a text format. This logger software gave AFEWES and the JADS observers the ability to view threat performance data. At this point we were only able to verify a limited portion of collected logger data.

3.3.3 Day #3, 29 Jul 98

OVERVIEW: The HITL data collection continued with the SADS VIII and WEST X manned simulators and JETS replicated the RF signals for the SADS VI and SADS III. This was the first day where JADS observed problems with the SADS VIII. During several runs, AFEWES experienced intermittent tracking error spikes. After exhaustive investigation AFEWES determined the problem involved the method used to compute the aircraft's velocity. AFEWES had used the current and previous aircraft positions. This method added an unnecessary amount of jitter that caused the SADS VIII tracking error to increase. The problem was avoided by using the current and future positions in the aircraft velocity calculation. This solution eliminated the "lag" and resulted in smoother target data inputs for both the SADS VIII and WEST X.

RESULTS: JADS executed 40 total runs and 27 were considered usable for analysis. Additionally, ADS security agreements between AFEWES and JADS were signed, and the T-1 hardware was installed the following day. The T-1 was installed in preparation for Phase 2, which

was to begin integration one month after the HITL test, but it proved to be a convenient method to transfer recorded data to JADS.

3.3.4 Day #4, 30 Jul 98

OVERVIEW: This was the final day of testing with the active SADS VIII and WEST X threats. During each run, the SADS VIII would normally fire several missiles. The TAMS two-dimensional simulation display depicted the appropriate number of missile firings. The raw missile data recorded by the logger and viewed on one of the test control room monitors displayed data for less than the total missiles fired. Also, the missile data displayed had constant latitude and longitude values (values did not change) and all zeros for the altitude. Although this situation seemed unacceptable, the only relevant data for the MOP computation were the missile miss distances. There were no additional changes implemented to fix this problem.

RESULTS: Of the 42 runs executed, 40 were good. JADS exceeded our goal of 100 runs by 32. There were a total of 62 scripts generated for this test, and we successfully completed—scored as good—132 runs. Each script was executed at least twice.

3.3.5 Day #5, 3 Aug 98

OVERVIEW: AFEWES operated the SADS III and SADS VI while the JETS replicated the RF signals of the WEST X and SADS VIII. This week began with several unrecoverable problems on the fifth day of testing. The SADS III Honeywell computer had a core memory failure. The component was replaced, but JADS lost most of the testing day. AFEWES also encountered several problems with the SADS VI. Initially, the SADS VI did not accept the aircraft information generated from TAMS. After rectifying this problem, one additional problem was found during the diagnosis of the initial problem. The location of the "true target" versus the SADS VI "perceived target"—the differences—equated to tracking error. This situation prevented the threat simulator from adequately engaging the target. AFEWES modified the simulator to accept the true target position which assumed perceived location equaled true location. We observed no further engagement anomalies.

RESULTS: Although no test runs were conducted, AFEWES corrected potential sources of error that could have negatively influenced the data used in calculating the MOPs. There were no other testing activities accomplished on this day. Also, in preparation for data transfer to JADS, the JADS Network and Engineering (N&E) representatives arrived at AFEWES and began installing the T-1 wide area network (WAN) communications equipment.

3.3.6 Day #6, 4 Aug 98

OVERVIEW: AFEWES operated the SADS III and SADS VI while the JETS replicated the RF signals of the WEST X and SADS VIII. On this day of testing, the SGI Challenge computer had one of six processors fail. The computer system used these processors to run the AFEWES software (RTI and data logger - one processor), the TAMS model (three processors), the interfacing software (interface to computer simulations-one processor), and Unix operating

system (one processor). AFEWES tried combining two functions on a single processor, but the processor did not maintain the real-time simulation. Their internal computer support agency was notified, and a representative for SGI assessed the situation but could not ascertain the problem. The following morning a cold reboot was enough to clear the computer fault prompt. We lost about two hours of the testing day.

RESULTS: This day's testing yielded a total of 34 runs and 21 were considered usable for analysis. The N&E representatives completed the final T-1 installation and connectivity was established between JADS and AFEWES.

3.3.7 Day #7, 5 Aug 98

OVERVIEW: Because of problems with the SGI Challenge (problems noted on day 6), HITL testing was delayed for three hours. Finally, the cold reboot corrected the mysterious processor fault. The technical representative from SGI did not locate any further problems and the system functioned without additional faults for the remaining test period. After confirming that there were no other faults indicated by the SGI Challenge, testing resumed with the SADS III and SADS VI simulators. During initial diagnostic checks of the SGI Challenge, the SADS III weapons control system failed. The system was fixed, and no additional testing time was lost. The SADS III and SGI Challenge systems were inoperative over the same period of time.

RESULTS: Although testing was delayed for three hours, no other problems occurred. AFEWES executed a total of 58 runs and 42 were usable for analysis.

3.3.8 Day #8, 6 Aug 98

OVERVIEW: JADS continued receiving data from runs executed with the SADS III and SADS VI simulators while the JETS replicated the RF signals of the WEST X and SADS VIII. The only delay encountered was caused by an inoperative optical disk in one of the TMCs. Because there were several AFEWES gateway shortfalls noted earlier, it became critical that our secondary data collection medium was operational. This problem only delayed testing for an hour. There was also an administrative delay for an hour.

RESULTS: JADS executed a total of 45 runs and 36 were good. At the end of the testing day AFEWES transmitted the data collected during the previous week's runs (SADS VIII and WEST- X manned threat) to JADS.

3.3.9 Day #9, 7 Aug 98

OVERVIEW: The last day of testing concluded with the same threat system configuration as the previous day. However, testing was delayed until the SADS III initialization and calibration processes were successfully completed. The TAMS also failed to transmit aircraft position data to the SADS systems on several occasions. After restarting the aircraft data scripts and clearing disk space on the SGI Challenge, we still experienced intermittent data stoppage; however, before the test day ended all the necessary runs were completed.

RESULTS: We executed a total of 40 runs and 32 were usable for analysis. All the remaining logger data files were sent to JADS via the T-1 WAN. Despite more problem instances, the second week was as successful as the first even though we used the backup day to replace time lost earlier in the week.

3.3.10 HITL Test Summary

Table 15. EW HITL Test Measures of Performance

MOP	Conditions	SADS III	SADS VI	SADS VIII	WEST X
Correct threat ID	NW,SW	X	X	X	X
Correct threat ID response time*	NW,SW				
Correct ECM technique selection	NW,SW	X	X	X	X
Correct ECM technique selection response time	NW,SW				
Jamming-to-signal ratio versus threats	NW,SW				
Increase in tracking error versus threat	ND+NW SD+SW	X	**	X	X
Number of breaklocks	ND,SD NW,SW	X	**	X	X
Reduction in engagement time	ND+NW SD+SW	X	**	X	X
Reduction in missiles launched	ND+NW SD+SW	X	X	X	
Missile miss distance	ND,SD NW,SW	X	X	X	

ND = northbound dry NW = northbound wet SD = southbound dry SW = southbound wet

*These response time MOPs could not be computed, because the test was unsuccessful in accurately recording time-stamped data.

** During the SADS VI engagements, we assumed perfect tracking.

3.3.10.1 HITL Run Summary

The run summary chart outlines the daily success rate and the overall successful runs completed during the HITL test. However, the in-depth analysis and MOP calculations will ultimately determine the final "success" rate of the data collected. Estimated completion for data analysis is April 1999.

	Total Runs	Completed	Aborted	Success Rate
Week 1 Day 1	31	25	6	80%
Week 1 Day 2	51	44	7	86%
Week 1 Day 3	40	27	13	68%
Week 1 Day 4	42	40	2	95%
Week 2 Day 1	0	0	0	--
Week 2 Day 2	34	21	13	62%
Week 2 Day 3	58	42	16	74%
Week 2 Day 4	45	36	9	80%
Week 2 Day 5	40	32	8	80%
Total	**341**	**267**	**74**	**78%**

3.3.10.2 Correct Threat ID

The correct threat ID MOP measures the jammer's ability to correctly identify a threat system during a wet run as the threat begins radiating the target (see paragraph 3.2.1 for complete definition of this MOP). The initial sample size for this MOP equals the number of completed runs.

3.3.10.3 Correct Threat ID Response Time

This response time MOP could not be computed in the HITL test because of the inability to implement an accurate time signal to the logger software within the AFEWES gateway. The digibus monitor events could not be accurately time synchronized with the logger file events to recreate the run engagements for calculating the response time MOP.

3.3.10.4 Correct ECM Technique Selection

A correct ECM technique selection is defined as the selection of the predicted ECM technique against a threat on a wet run. To assess correct ECM technique selection accuracy, the only condition that must be met is a correct threat ID. Since the correct ECM selection depends on getting a correct threat ID first, this sample size is the same or a smaller subset than the correct ID.

3.3.10.5 Correct ECM Technique Selection Response Time

The digibus monitor events could not be accurately time synchronized with the logger file events to recreate the run engagements for calculating this MOP because of lack of time synchronization of the AFEWES computers to GPS time.

3.3.10.6 Jamming-to-Signal Ratio Versus Threats

Since the focus of this MOP is on the potential range and frequency of the data and not necessarily the number of runs, sufficient data were collected to support the calculation of this MOP.

3.3.10.7 Increase in Tracking Error Versus Threat

This MOP involves a comparison of tracking error against a target between wet and dry runs with the goal of quantifying the percentage difference between wet runs and an established dry run baseline. There were sufficient wet and dry run data collected to support the calculation of this MOP.

3.3.10.8 Number of Breaklocks

The goal of this MOP is quantification of the number of breaklocks per run for both wet and dry engagements. The initial data set was the number of runs completed.

3. 3.10.9 Reduction in Engagement Time

This MOP involves a comparison of good engagement time between wet and dry runs with the goal of quantifying the percentage difference between wet runs and an established dry run baseline. Good engagement time is defined as the percentage of time a threat is in a good track mode compared to the total time from when the threat first enters a good track mode until the end of the engagement. Tracking error and track modes were collected and should provide data to calculate this MOP.

3 3.10.10 Reduction in Missiles Launched

This MOP involves a comparison of the number of missiles launched between wet and dry runs with the goal of quantifying the percentage difference between wet runs and an established dry run baseline. The missile shots were delivered from the HITL data. Normally, there were several missile shots per completed run.

3.3.10.11 Missile Miss Distance

The missile miss distance MOP involves a comparison of miss distances between wet and dry runs with the goal of quantifying the percentage difference between wet runs and an established dry run baseline. The missile shots were collected at the HITL test.

3.4 SIL Execution

The goal of the SIL test was to collect 60 response time samples for each emitter mode change event in the JADS site controller matrix. The required measurement accuracy for the response time was 100 ms with a goal of 10 ms. The test setup is described in Figure 5.

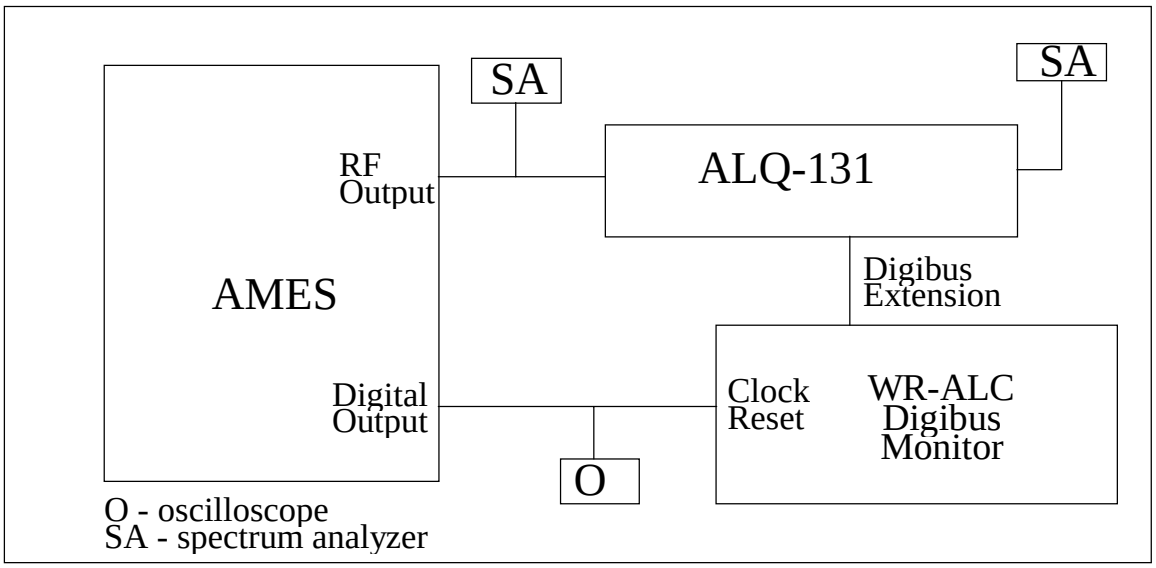

Figure 5. Response Time Measurement Test Setup

The Automatic Multiple Environment Simulator (AMES) was used to generate a dynamic RF scenario that was used to stimulate the ALQ-131. The AMES RF output was coupled into the pod behind the receive antennas. A spectrum analyzer (SA) was used to monitor the RF input into the pod. A second spectrum analyzer was used to monitor the technique waveforms generated as responses to the RF input. The Warner Robins Air Logistics Center (WR-ALC) version of the digibus monitor was connected to the ALQ-131 digibus external connector. A single emitter designated as the synchronous emitter was routed to the digital output of the AMES. This output generated a time-to-live (TTL)-compatible pulse synchronous with the RF pulse output for the desired emitter. This digital output was used to reset the digibus clock which was used to time-tag R/P events. This internal digibus clock is a crystal-controlled counter with a maximum count of approximately 11 hours. An oscilloscope was used to monitor the digital output from the AMES. A liquid emitter diode (LED) located on the AMES front panel was also used to monitor this output. When an emitter mode change occurred, the synchronizing emitter was activated at the same time for a short interval to reset the digibus counter. When the R/P event was captured by the digibus monitor, the time-tag would then be the elapsed time since the reset (or the emitter mode change event time) which was the desired response time.

3.4.1 Scenario

The scenario simulated was as close as possible to the one used during the OAR baseline testing. The aircraft heading was automatically computed by the AMES. The four emitters were simulated using archived catalogs for threat descriptions and the actual range threat positions. Some changes to the archive files were necessary to simulate the threat. These changes included changing the frequency and pulse repetition interval (PRI) of the SADS VIII target track radar and removing the scan from the SADS VI illuminator signal. These changes were necessary to conform to the JADS rules of engagement. A fifth emitter was programmed into the AMES for the purpose of providing the necessary synchronization to the digibus monitor. This emitter was placed at an RF frequency outside the bands of interest for the ALQ-131.

3.4.2 Results

All goals of the test were met. A total of 60 trials were executed to collect response time data. Each trial consisted of a southbound and northbound pass and each trial generated one sample per emitter mode change event for a resulting sample count of 60. Response time data were collected with an accuracy better than 10 ms and measurement resolution was equal to or better than the accuracy.

3.5 Repeatability and Correlation Analysis

The JADS test scenario was designed to reduce the run-to-run variation. We scripted as much of the scenario as possible to limit the variation within each facility and across the facilities. This was largely successful. However, the test scenario stressed each facility's ability to reduce the run-to-run variation. The primary source of variation, both within and across facilities, was human operator and test control. We found the OAR baseline had more run-to-run variation than AFEWES. A number of factors can be cited for this. The time between missions was a critical factor. Better results were obtained when missions were flown on successive days. Another factor was the number of different operators from mission to mission at the OAR. AFEWES used only one team of operators for each threat. Finally, we found a cultural difference between the facilities. AFEWES is primarily a developmental test facility, while the OAR specializes in operational effectiveness testing. Developmental tests emphasize tight control and repeatability, while the operational tests emphasize operator freeplay and skill.

Data results are classified and are contained in a separate report. GTRI was tasked to reduce and analyze all Phase 1 data and report the results. Their report will discuss each MOP and provide the statistical results (mean and variance). JADS will attempt to identify sources of variance where possible. In addition, GTRI will perform the correlation analysis of OAR baseline and HITL data. The classified report will describe the baseline data that JADS will use for correlation with the ADS-based test phases.

4.0 Lessons Learned

4.1 Risk Reduction/OAR Baseline

4.1.1 Technical

4.1.1.1 Instrumentation

This section summarizes the lessons JADS learned during the Phase 1 execution.

LESSONS LEARNED: The overall lesson learned concerning both range and airborne instrumentation is to take the time prior to the test to thoroughly verify the real capabilities of the systems proposed. The test planner must be able to clearly define specific requirements to the test agency providing the instrumentation and ask the pertinent questions to find out whether the instrumentation meets the requirement. In most cases, modifications, improvements, and/or procedural changes are needed to tailor the use of the instrumentation to the needs of the individual test. Test facilities and instrumentation suppliers are in the business of "selling" the capabilities of their assets and it is up to the test manager to determine their true capability/applicability by asking the hard questions. We were constrained to existing instrumentation and as a result had to overcome data shortfalls. JADS experience with the RDAPAS assets and the ALQ-131 1553 databus cards are vivid examples of this lesson.

4.1.1.2 Range Operations

4.1.1.2.1 Mission Control

Test control was a source of execution problems. Premission problems were reduced by using a very detailed premission checklist and by the EW Test personnel deploying to the range prior to each mission to confirm preparations were being implemented according to plan. During the mission, the mission controller, in charge of calling out execution condition "marks," was sometimes hampered by other duties. Besides controlling the start and stop of each mission, the controller was also expected to handle real-time equipment problems as they occurred during a mission. Because of this task loading, execution "marks" were called late many times and occasionally missed. This situation improved late in the OAR baseline flight schedule when the other duties were finally delegated to someone else.

There were also occasional range coordination problems such as the incorrect range area being requested for flight clearance, confusion resulting in video recorders not to be turned on, execution scripts not available/not reviewed at some threat sites, and the test aircraft arriving at the IP too early/late for the start of the range time.

LESSON LEARNED: Test controller workload should be analyzed ahead of time and divided among two or more individuals so that crucial test condition calls can be made consistently from run to run.

4.1.1.2.2 Threat Operating Procedures

The initial JADS approach allowed the threat operators to use their best judgment in employing the threats to acquire and track the test aircraft. However, this approach introduced too much variation in the test conditions. Therefore, a site controller matrix (See Appendix D) was developed to reduce threat operation variability and generate more consistent run conditions. However, it was realized that even with the carefully written down site controller matrix and the ROE, there was still some ambiguity. The cure for these ambiguities was face-to-face meetings with all operators early on. These meetings were followed by actual over-the-shoulder observation and pre- and post briefs by designated site observers.

An associated problem involved the threat operators consistently following the rules of engagement. JADS missions were sometimes 3-4 weeks apart and the operators were not always the same from mission to mission. This required JADS to refresh the operators on JADS-peculiar operations prior to each mission to preclude errors in following the ROE. This required a lot of extra time by the JADS observers in "retraining" the operators.

LESSONS LEARNED: A detailed threat operations matrix will help ensure consistent threat turn-on/off times, mode changes, and rules of engagement procedures for a structured test such as the JADS EW Test. Also, if missions are separated by weeks, the operators need to be refreshed on operating procedures prior to each mission to ensure enforcement of the ROE. This may not be desirable in a more operational test and evaluation (OT&E)-oriented test but is necessary when precise baseline data are needed. The communication process with threat operators is more complicated than it would appear. For example, the "no-ECCM" ROE seemed clear and unambiguous. However, only after a series of meetings were all of the ambiguities cleared up.

4.1.1.2.3 Communications

Communications among JADS personnel in the mission control room and observers at individual sites were inadequate at first but improved markedly with the establishment of a dedicated observer net in addition to the customer net. This net allowed direct feedback and test condition adjustments real time when anomalies were noted.

LESSON LEARNED: A separate test observer communications link between the mission control center and individual threat sites is very beneficial to detect problems and address them in near real time.

4.1.1.3 Threat Simulators

There are no recommendations or changes associated with the threat simulators. One important concern during the OAR baseline test phase was to ensure that threat operators consistently adhered to the JADS rules of engagement. Because of the gaps in time between risk reduction missions, large variances in operator actions were observed. Operator performance during a mission should be monitored and variances from the rules of engagement recorded. These

variances should then be briefed to the individual site operators prior to the next flight test mission to prevent them from recurring in subsequent test missions.

4.1.1.4 Data Processing and Delivery

4.1.1.4.1 Data Processing Tools

Data processing was supposed to be enhanced by the existence of an automated data reduction application. The application chosen was ADRS (Automated Data Reduction Software), a GTRI product which evolves with each new GTRI customer and their needs. After a series of discussions with the WTR analysts, significant progress was made in finalizing data sources, formats, and collection rates. However, the software was not completely ready before the beginning of testing and refinements continued beyond Phase 1 execution.

Our first ADRS version was plagued by software bugs which caused the system to crash frequently. Through diligent, comprehensive feedback to the GTRI programmer, nearly all these bugs were fixed. Even though GTRI was responsive, these fixes took place midstream and they hampered data reduction and analysis.

The second problem involved JADS special data analysis requirements for a small number of the MOPs. More ADRS code needed to be built to handle these requirements. This recoding took place *while* OAR baseline missions were being flown. This overlap impeded reporting final results on every MOP.

The third problem resulted from changing MOP calculation methods after receipt of the first version of ADRS. The definition and calculation of four MOPs continued to evolve throughout Phase 1 and Phase 2 execution to allow for better correlation and repeatability in the test.

The data analysis and reduction tools used for the OAR baseline missions were cumbersome, often slow to execute, and some utilities did not work (e.g., time skip function, MOP data export function). The preparatory tools used on OAR baseline mission data were the ALQ-131 digibus reader, emitter mode verification (EMV) converter, Dbase utility, and the Firefly split tool. All of these tools use separate application interfaces that were often clumsy and difficult to understand (especially the digibus reader). This made it very difficult for new team members and outside personnel to understand the data analysis process and hinders productivity.

LESSON LEARNED: Contractor developed data analysis tools should be completely developed and demonstrated prior to the start of test. This should include hands-on practice (training) reducing and analyzing representative data expected from the test. Analysis of data from risk reduction missions will help work out the bugs in the data analysis tool and allow for improvements prior to working on data from the missions for record.

Data reduction tools need to have a common interface that will call upon the individual tools. Moreover, they should be selectable in the order used so the user knows what actions need to be performed and in what order.

4.1.1.4.2 Data Delivery

Timely data delivery is paramount to test success. A number of the JADS EW Test risk reduction missions were flown almost back to back, and it was not possible to obtain and analyze the results from one mission before flying the next. Quick data receipt and analysis can be crucial to troubleshooting and mission success, especially during a risk reduction process.

LESSON LEARNED: The timeline for flight test data reduction and analysis is just as important as the mission schedule timeline. Efficiency is lost (i.e., successive missions flown with bad assets) if data cannot be examined between missions. Missions (especially during risk reduction) must be scheduled with adequate time between to analyze data from the previous mission. Another lesson is that all means must be exercised to expedite delivery of range and aircraft data products to the analysts whenever mission schedules are tight.

4.1.2 Infrastructure

4.1.2.1 Personnel

The JADS EW Test team is comprised of a few individuals with expertise in areas of program management, test and evaluation, electronic warfare, analysis, statistics, etc. Additional analyst support is provided within the JADS Joint Test Force outside of the EW Test team. All key personnel with the exception of GTRI were collocated. Integrating GTRI personnel into the daily decision-making process was elusive.

LESSON LEARNED: The mix of skills the team possessed was adequate for managing the task. JADS was fortunate to get properly skilled military and contractor people for key positions. Future test organizations need to plan on filling highly technical or special skills positions with contractors or through arrangements with outside agencies.

4.1.2.2 Support Agencies

4.1.2.2.1 Integrated Product Team (IPT)

The IPT helped bridge gaps in expertise and helped with programmatic decisions. The concept of an IPT is a good one. However, disadvantages arise with the geographical separation of the members of the IPT. The JADS EW Test IPT consists of members resident from coast to coast. Teleconferencing and electronic mail are powerful tools that overcame some of these communication obstacles; however, the most progress is made when members meet face-to-face. This is due to the highly technical nature of the work, the concepts involved, and the software/hardware which are used on this test.

LESSONS LEARNED: When technical problems arise, teleconferences and/E-mail can help solve many of the issues, but in many cases face-to-face meetings between key players are needed to resolve items. This allows direct give-and-take questions to reduce incorrect interpretations

and confusion of what was said versus what was meant. Such meetings must have the following elements.

- Attendees limited to those individuals from each key agency who can and will make decisions and commit required support to the test
- Specific agenda including status updates from previous actions items
- Specific action items assigned to individuals by name with suspense dates
- Periodic review and formal tracking of action item suspenses

4.1.2.2.2 AATC

Normally, operations went smoothly in this area. JADS received outstanding support from AATC ECM pod personnel. However, occasionally data were lost during some of the test missions because of errors in pod control switch actions in flight. This appeared to be because of pilot unfamiliarity and/or lack of premission briefing on the pod functions and controls. A number of different pilots flew the various test missions, and some were very familiar with ALQ-131 pod operation and peculiarities while others were not.

At times, JADS had difficulty effectively scheduling AATC test aircraft, ECM pods, and personnel to support available test range periods. Scarce assets and other AATC mission priorities as well as late changes to range schedules contributed to this problem. JADS compensated by over scheduling the range.

LESSON LEARNED: The aircrew must be thoroughly briefed on operation and functions of the system under test. This is especially crucial when test instrumentation is interfaced with the test item that may affect its normal operation. Whenever feasible within aircrew scheduling limitations, the same aircrew members should fly as many of the test missions as possible to reduce the learning curve from mission to mission.

The lesson learned concerning scheduling problems is that test managers must get firm support agency commitments during initial test planning, fully understand support agency and range scheduling flexibility limitations, and factor those into the overall test schedule. However, over scheduling has negative impact on efficient range usage.

4.1.2.2.3 GTRI

GTRI technical expertise was crucial to the success of the JADS EW Test program. GTRI direct interaction with JADS EW Test team members was needed to address a number of data analysis issues during risk reduction. Lack of effective communication among individuals during this process sometimes was a problem which impacted solving issues. The technical expertise required was resident within the GTRI staff; however, it was difficult to access it because early agreements established a single point of contact (POC) (GTRI program manager) to coordinate the contracted technical expertise. Because of this bottleneck, the team was often unable to directly interface with the individual GTRI expert needed to solve a particular problem in a timely manner. This also unnecessarily burdened the program manager with personnel management

actions instead of allowing time to work technical problems effectively. Critical details were lost transmitting information through multiple nodes in the organization and progress was impeded. This led to many miscommunications, misunderstandings, delays, and undue stress on the GTRI POC and JADS team members.

LESSON LEARNED: Having a contractual single point of contact to coordinate support can be a good management technique; however, that POC must be flexible enough to arrange for and allow direct working relationships among technical experts and the test team members. Such agreements should be established early in the program and clearly defined to the satisfaction of all parties.

4.1.2.2.4 Jammer Support

AWC support was required throughout the risk reduction effort in several areas including technical expertise, troubleshooting, and instrumentation hardware and software. This support was provided without fail, many times on short notice and requiring the help of several internal AWC organizations. AWC personnel support and instrumentation recorder cards, even though not formally coordinated prior to the test, were exceptional and precluded several major test delays.

WR-ALC technical support was provided in the test planning phase and was available throughout the risk reduction phase. Interface difficulties with the WR-ALC-developed 1553 bus recorder cards prevented their use during the majority of this phase because of the length of time that would have been required to refine the interface. Data collected on the ALQ-131 recorder cards precluded the need for rework of the 1553 bus recorder cards.

LESSON LEARNED: Given the low priority of a joint test activity, the tester needs to investigate all possible sources of support and technical expertise for the system under test. In our case we received better support from the operational rather than logistics agencies.

4.2 HITL

4.2.1 Technical

4.2.1.1 AFEWES Operations

JADS and AFEWES had not firmly established the type of JADS user accounts and level of permissions required for SGI Challenge computer. Moreover, a location for the HITL data (computer system, file labeling convention) at JADS was not established prior to data transfer. Once the data were transferred to JADS, the location was known only to certain individuals making finding the data cumbersome. AFEWES also used a confusing file labeling convention for each run—the file contained the date and time but not the run number. AFEWES changed the labels when the data were reconstructed from the optical disk format. In future testing the file labeling convention will be clearly defined with no ambiguity.

LESSON LEARNED: Testers must establish user accounts and file naming convention prior to starting a test.

4.2.1.2 Threat Simulators

If differences in the Western Test Range SADS VI and the AFEWES SADS VIM had been sufficiently understood by JADS and AFEWES, the tracking error problem may have consumed less time to resolve. Generally, there were several differences in the operation and design of the Western Test Range and AFEWES simulators that were not fully understood until after the completion of the Phase 1 OAR baseline test. Although the ROE were designed to bridge these differences, we could not constrain the ROE for the HITL test any further. The operational differences noted during the OAR baseline test were beyond the AFEWES threat simulators' system limitations.

LESSON LEARNED: To reduce differences between WTR and AFEWES (or between any two test facilities) the tester should sponsor an open interchange among system experts. In our case we needed the operators of the threat systems from each test facility to meet and identify the correct ROE.

4.2.1.3 Data Processing

The integration of ADRS into the data analysis process was slow. Moreover, the AFEWES nonstandard, newly developed software, RTI interface logger, and the ADRS tool were a hastened design and integration process. The time required to develop and integrate these items was under estimated and limited by the condensed schedule. Although the logger was helpful for the next phase of testing, JADS later determined that the data published by the AFEWES software were still inadequate for analysis—critical items remained missing. However, the valid data were later retrieved from AFEWES optical disk format and processed through their amended federate software. Additionally, the HITL test was designed to have ADRS available for processing the very first set of test data; however, this did not happen. ADRS was not available to review the data for completeness and to ensure the logger and digibus monitor files were time synchronized; therefore, the SIL test was required to be added to collect the jammer timing MOPs.

LESSON LEARNED: The HITL test used several new or modified software components as a part of data collection and analysis. Under these conditions, it is paramount that testers exercise each component and verify that it conforms to the agreed upon specifications even within a condensed schedule. Furthermore, data analysis tools should be verified prior to the execution of the test.

4.2.2 Infrastructure

The necessity for accurate timing, given our testing and architectural design, was paramount; however, there was a gap between what JADS conveyed and what AFEWES comprehended. JADS was the first customer at AFEWES to require that all data sources have a common time

reference outside of their normal resources. Although site surveys and technical interchange meetings occurred, there remained a gap in understanding of the timing requirements.

LESSON LEARNED: The customer must ensure that all requirements are met. A requirements back-brief or critical design review from AFEWES might have prevented this misunderstanding.

Appendix A - Acronyms, Abbreviations and Definitions

413 FLTS	413th Flight Test Squadron, Edwards AFB, California
A/C	aircraft
AAA	anti-aircraft artillery
AATC	Air National Guard Air Force Reserve Test Center, Tucson, Arizona
ACC	Air Combat Command
ACETEF	Air Combat Environment Test and Evaluation Facility, Patuxent River, Maryland; Navy facility
ACVR	advanced crystal video receiver
ADRS	Automated Data Reduction Software
ADS	advanced distributed simulation
AFB	Air Force base
AFEWES	Air Force Electronic Warfare Evaluation Simulator, Fort Worth, Texas; Air Force managed with Lockheed Martin Corporation
AGC	automatic gain control
AIM	air intercept missile
ALQ-131	a mature self-protection jammer system; an electronic countermeasures system with reprogrammable processor developed by Georgia Tech Research Institute
ALR-69	airborne multipurpose radar warning receiver used in F-16 aircraft
AM	amplitude modulation
AMES	Automatic Multiple Environment Simulator at Eglin AFB, Florida
APA	analysis plan for assessment
AWC	Air Warfare Center at Nellis AFB, Nevada, and Eglin AFB, Florida
AZ	azimuth
C4ISR	command, control, communications, computers, intelligence, surveillance and reconnaissance
CW	continuous wave
dB	decibel
DDT&E	Deputy Director, Test and Evaluation
DMAP	data management and analysis plan
DO	deputy commander for operations
DoD	Department of Defense
dry run	the system under test is off
DSM	digital system model
DT&E	developmental test and evaluation
DTM	digibus traffic monitor
DTMS	Digibus Traffic Monitor System
ECCM	electronic counter-countermeasures
ECM	electronic countermeasures
EIOB	enhanced input/output buffer
E-mail	electronic mail

EL	elevation
EMV	emitter mode verification
EW/EW Test	electronic warfare; JADS Electronic Warfare Test
FCS	fire control system
ft or ’	feet
GPS	global positioning system
GTRI	Georgia Tech Research Institute, Atlanta, Georgia
GUI	graphical user interface
HITL	hardware-in-the-loop (electronic warfare references)
HLA	high level architecture
hr	hour
Hz	hertz
I/O	input/output
IADS	Integrated Air Defense System
IAW	in accordance with
IC	initial condition
ICD	interface control document
ID	identification
IF	intermediate frequency
IFF	identification friend or foe
INS	inertial navigation system
IP	internet protocol; initial point
IPT	integrated product team
IRIG	Inter-Range Instrumentation Group
ISTF	installed system test facility
J/S	jamming-to-signal ratio
J+S	jamming plus signal
JADS	Joint Advanced Distributed Simulation, Albuquerque, New Mexico
JETS	JammEr Techniques Simulator
JT&E	joint test and evaluation
JTF	Joint Test Force, Albuquerque, New Mexico
K	thousand
kHz	kilohertz
LED	liquid emitter diode
m	meter
MCC	mission control center
MHz	megahertz
MIL-STD	military standard
mm	millimeter
MMDS	missile miss distance simulation
MOP	measure of performance
ms	millisecond
MSL	mean sea level
MSN	mission
MT	message tape

N&E	network and engineering
NM	nautical mile
ns	nanosecond
OAR	open air range
OFP	operational flight program
OSD	Office of the Secretary of Defense
OT&E	operational test and evaluation
PC	personal computer
POC	point of contact
PRF	pulse repetition frequency
PRI	pulse repetition interval
PT	preflight message tape
PTP	program test plan
QA	quality assurance
R/P	receiver processor
RAJPO	Range Applications Joint Program Office, Eglin Air Force Base, Florida (provides GPS pods)
RCS	radar cross-section
RDAPAS	Radar Detection and Performance Analysis System
RF	radio frequency
ROE	rules of engagement
RTC	reference test condition
RTI	runtime infrastructure
RWR	radar warning receiver
S/W	software
SA	situational awareness; spectrum analyzer
SAC	senior advisory council
SADS	Simulated Air Defense System
SAIC	Science Applications International Corporation
SAM	surface-to-air missile
SASY	Signal Analysis System
SGI	Silicon Graphics, Inc.
SIL	system-in-the-loop; system integration laboratory
SIMVAL	simulation validation
SPAG	software-programmable antenna pattern generator
Spectrum™	an instrumentation suite used to measure band width utilization
SPJ	self-protection jammer
SSA	SASY site Alpha
SUT	system under test
SVB	signal van Bravo
SVC	signal van Charlie
SWR	Southwest Research Corporation
T&E	test and evaluation
T/O	take off
T-1	digital carrier used to transmit a formatted digital signal at 1.544 megabits

	per second
TAB	technical advisory board
TAMS	Tactical Air Mission Simulator
TAP	test activity plan
TAR	target acquisition radar
TATS	Target Acquisition and Tracking System
TCAC	Test Control and Analysis Center, Albuquerque, New Mexico
TDOP	TSPI (time-space-position information) Data Optimizing Processor
TEL	transporter, erector, launcher
TMC	test management center
TSPI	time-space-position information
TTL	time-to-live
TTR	target tracking radar
UTC	universal time code
V&V	verification and validation
VCR	video cassette recorder
VHS	electronic system for recording video and audio information
WAN	wide area network
WEST	Weapon Evaluation Simulated Threat
wet run	the system under test is on
WR-ALC	Warner Robins Air Logistics Center, Georgia
WTR	Western Test Range

Appendix B - JADS EW Test Rules of Engagement

Introduction

This appendix was prepared to delineate the common rules of engagement (ROE) that were used during the open air range (OAR) baseline testing and, where appropriate, during remaining phases of the Joint Advanced Distributed Simulation (JADS) Electronic Warfare (EW) Test. ROE are intended to constrain the operator actions to those that can be accomplished at both test locations (open air range and the Air Force Electronic Warfare Evaluation Simulator) while allowing some freedom to engage the aircraft. The intent is to activate and deactivate the threat sites at the same range for every pass. A script was developed to queue each site operator when to radiate and when to go to standby modes. The site is expected to acquire, track, and simulate firing at the target within the rules provided below. Prior to activation and after deactivation the site is expected to be in "standby/dummy load." These rules are necessary to allow maximum opportunity for gathering repeatable data across all test phases while allowing enough variation between engagements to assess the impact of advanced distributed simulation technology.

B1. Simulated Air Defense System (SADS) III ROE

B1.1 General

- The operator will ensure the system does not use any electronic counter-countermeasures (ECCM) at any time. Ensure instrumentation is reporting miss distance and missile position data.
- High pulse repetition frequency (PRF) will be used for target acquisition and tracking.
- One engagement will be flown per each northbound and southbound leg of the profile.
- Threat engagements will be scripted (site operator "radiate/standby" times directed by ramrod).
- Target Acquisition and Tracking System (TATS) will be used prior to each threat engagement to ensure the target is within both the azimuth (AZ) and elevation (EL) beams of the target tracking radar (TTR) system. TATS will be turned off just prior to the operator initiating radar track.
- The operator will engage the target as often as normal but not exceed six salvos per engagement window with several seconds between last missile flyout (recall) and launch of the next salvo. This is because of a limitation with another simulator during later phases of the JADS EW Test.
- Site operators may use TATS to reacquire a lost target track if other attempts to reacquire fail after a reasonable amount of time (~several seconds).
- 3-point guidance mode (beam riding) is the only guidance mode allowed.
- Radar Detection and Performance Analysis System (RDAPAS) instrumentation will be on at all times the system is radiating.
- When your "OFF" mark is called, immediately go to standby/dummy load even if missiles are in the air.

B1.2 Normal Threat Engagement Sequence

- Site in standby/dummy load and slaved to target through TATS.
- At the appropriate "MARK" call, site operator will disengage TATS, go out of standby/dummy load, and acquire the target.
- The threat will attempt to acquire target using high PRF mode via the trough antenna.
- The site operator auto tracks the target (manually aided if necessary) using high PRF mode when radiating through the antenna dish and receiving through the antenna trough.
- Operator fires missiles at will not to exceed six salvos per engagement.
- After all missile engagements have been completed, the site continues to track the target until commanded to disengage. At this time, the site returns to standby/dummy load and prepares for next engagement.

B2. SADS VI ROE

B2.1 General

- The operator will ensure the system does not use ECCM at any time.
- Miss distance/missile position data from the OAR baseline test phase is not required (JADS will obtain missile launch times from the OAR and use standard seeker data products from AFEWES for all the test phases).
- One threat engagement will be flown per each northbound and southbound leg of the profile.
- Threat engagements will be scripted (site operator "radiate/standby" times directed by ramrod).
- TATS will be used prior to each threat engagement to ensure the target is within the TTR beam of the system.
- The operator will engage the target as often as normal. Site operators may use TATS to reacquire a lost target track if attempts to reacquire fail after a reasonable amount of time (~several seconds).
- Missile launches will be directed by the command vehicle not the launch vehicle.
- A maximum of 6 launches per engagement with at least 30 seconds from last missile flyout (recall) to launch of next missile will be used. No more than one simulated missile in the air at a time.
- The illuminator signal should be on during each missile launch and off at the end of the missile flyout.
- When your "OFF" mark is called, immediately go to standby/dummy load even if missiles are in the air.

B2.2 Normal Threat Engagement Sequence

- The site will be in standby/dummy load and slaved to the target through TATS.
- At the appropriate "MARK" call, site operator will disengage TATS, go out of standby/dummy load, and acquire the target.
- The operator will use the target acquisition radar (TAR) to acquire the target.
- TTR radiates and tracks the target.
- The site operator engages the target as normal under command vehicle control.
- After all missile engagements have been completed, the site continues to track the target until commanded to disengage. At this time, the site returns to standby/ dummy load and prepares for the next engagement.

B3. SADS VIII ROE

B3.1 General

- The operator will ensure the system does not use ECCM at any time. Ensure instrumentation is reporting miss distance and missile position data.
- No staggered pulse repetition interval (PRI) modes will be allowed. Site operators will use normal PRI mode for target tracking.
- One threat engagement will be flown per each northbound and southbound leg of the profile.
- Optical tracking will be allowed only to augment TATS.
- The operator will operate the TAR in normal mode (360 degree search).
- Threat engagements will be scripted (site operator "radiate/standby" times directed by ramrod).
- The operator will engage the target as often as normal.
- A maximum of 8 launches (missiles) per engagement with several seconds between last missile flyout (recall) and next launch will be used. No more than 2 simulated missiles in the air at a time.
- Site operators may use TATS (with optics) to reacquire a lost target track if attempts to reacquire fail after a reasonable amount of time (~several seconds).
- 3-point guidance mode (beam rider) is the only guidance mode allowed.
- RDAPAS instrumentation will be on at all times the system is radiating.
- When your "OFF" mark is called, immediately go to standby/dummy load even if missiles are in the air.

B3.2 Normal Threat Engagement Sequence

- The site will be in standby/dummy load and slaved to the target through TATS (with optics).
- At the appropriate "MARK" call, site operator will disengage TATS, go out of standby/dummy load, and acquire the target.
- TAR will be used to initially acquire the target. The site operator transitions to TTR using normal threat hand-off doctrine (i.e., operator's discretion).
- The site operator engages the target as normal.
- After all missile engagements have been completed, the site continues to track the target until commanded to disengage. At this time, the site returns to standby/ dummy load and prepares for the next engagement.

B4. Weapon Evaluation Simulated Threat (WEST) X ROE

B4.1 General

- The operator will ensure the system does not use ECCM at any time.
- No miss distance/projectile position data will be required.
- No stagger PRI modes will be allowed. The normal PRI mode should be used during all engagements.
- Threat engagements will be flown on northbound runs only.
- Threat engagements will be scripted (site operator "radiate/standby" times directed by ramrod).
- The site operator will use radar data only; optical tracking will be allowed only to augment TATS.
- TATS (assisted by optics) will be used prior to each threat engagement to ensure the target is within the beam of the TTR. TATS/optics can be used until after auto track is established, then TATS will be turned off and optics not used.
- Site operators may use TATS (aided by optics) to reacquire a lost target track if other attempts to reacquire fail after a reasonable amount of time (~several seconds).
- RDAPAS instrumentation will be on at all times the system is radiating.

B4.2 Normal Threat Engagement Sequence

- The site will be in standby/dummy load and slaved to the target through TATS with the assistance of optics.
- The site operator will attempt to acquire the target.
- Immediately after establishing auto track, TATS/optics will be disengaged.
- The site operator auto tracks the target (manually aided if necessary).
- The site operator engages the target as normal. The site continues to track the target until commanded to disengage. At this time, the threat returns to standby/dummy load and prepares for the next engagement.

Appendix C - Go/No-Go List.

Resource	Go/No-Go Criteria
Mission Personnel	
Range Ramrod	Required
Range Aircraft Controller	Required
JADS Mission Controller	Required
JADS Mission Observers	Not Required - Quick-look and full analysis can still be done
GTRI SASY Observer	Required at SSA or SVC; not required at SVB
Threat Site Operators	Required at each operational threat site (see "Threat Sites" below)
AATC Observer	Not required
AATC = Air National Guard Air Force Reserve Test Center SASY - Signal Analysis System SVB = signal van Bravo	GTRI = Georgia Tech Research Institute SSA = SASY site Alpha SVC = signal van Charlie

Aircraft Systems	
F-16 Test Aircraft	Required - A/C #1262. Must have all proper stores (ALQ-131 on centerline station, 2 RAJPO pods or 1 RAJPO and 1 AIM-9 simulator pod, 2 fuel tanks, and 1 Firefly).
F-16 INS	Required.
F-16 FCS Radar	Not Required
ALQ-131 Jammer	Required - Pod #633; All 3 bands must be operational.
ALQ-131 Mission S/W Load	Required - limited receive/limited response tape (MT-0701)
ALR-69 RWR	Required - ACVR hardware preferred
ALR-69 Video Recording	Not Required
Firefly Pod	Required - on station #7
ALQ-131 Recorder Cards	Required
RAJPO Pods	1 Required - 2 pods preferred
Pilot Flight Cards	Required
A/C = aircraft AIM = air intercept missile FCS = fire control system MT = message tape RWR = radar warning receiver	ACVR = advanced crystal video receiver ALQ-131 = a mature self-protection jammer system INS = inertial navigation system RAJPO = Range Applications Joint Program Office S/W = software

GO / NO-GO List (Continued)

Resource	Go/No-Go Criteria
Range Support	
Threat Sites	Required - Note: all 4 sites preferred. As a minimum, 3 sites must be operational.
Switch Activity Records	Required
MMDS Instrumentation	Required - Missile miss distance instrumentation must be available for SADS III and SADS VIII.
Threat Video Recording SASY Site SSA	Not Required Required - Note: SSA not required if Spectrum, pulse, and network analyzers can be relocated to SASY SVC.
SASY Van SVB	Not Required
SASY Van SVC	Not Required
SASY Pulse Descriptors	Required
SASY Video Recording	Required - SADS VI is especially critical.
RDAPAS Instrumentation	Required - Note: An individual mission will not be aborted if one of the three RDAPAS systems is inoperable for that mission; however, substantial RDAPAS data must be collected for SADS III , SADS VIII, and WEST X by end of OAR baseline phase.
TATS	Required - at all threat sites and SASY SSA and SVC sites.
Radar Tracking TSPI	Not Required
Observer Room Displays	Not Required
Test A/C Ground Refueling	Not Required

MMDS = missile miss distance simulation
RDAPAS = Radar Detection and Performance Analysis System
Spectrum™ = an instrumentation suite used to measure band width utilization
TSPI = time-space-position information

OAR = open air range
SADS = Simulated Air Defense System
TATS = Target Acquisition and Tracking System
WEST = Weapon Evaluation Simulated Threat

Appendix D - Site Controller Matrix

SADS = Simulated Air Defense System
WEST = Weapon Evaluation Simulated Threat

Condition	Range (nautical miles from initial point)	SADS III	SADS VI	SADS VIII	WEST X
Northbound					
1	0.0	ON	OFF	OFF	OFF
2	4.5	“	ON	“	“
3	6.0	“	“	ON	“
4	8.6	“	“	“	ON
5	13.6	“	“	OFF	“
6	16.0	OFF	“	“	“
7	17.6	“	OFF	“	OFF
Southbound					
1	1.5	OFF	OFF	ON	OFF
2	3.7	“	ON	“	“
3	6.0	ON	“	“	“
4	16.0	“	“	OFF	“
5	17.5	“	OFF	“	“
6	21.0	OFF	“	“	“

Appendix E - Range Instrumentation Description and Limitations

E1. Signal Analysis System (SASY)

E1.1 Description

The SASY and associated signal vans provide radio frequency (RF) measurement capabilities for collecting quality assurance (QA)-type data relative to the RF test environment. SASY performs this function by using multiple sites and multiple pieces of RF collection equipment located at each site. The primary functions of the SASY relative to the Joint Advanced Distributed Simulation (JADS) test are

- Provide QA verification of intended RF emissions from the threat sites. The SASY is designed to verify that all sites are operating in their intended modes as defined by the rules of engagement (ROE).
- Provide QA verification of intended RF emissions from the ALQ-131. The SASY should be able to verify that the electronic countermeasure (ECM) responses are in accordance with the technique parameters programmed in the ALQ-131.
- Provide QA verification of unintended RF emissions in the test environment. The SASY should perform spectrum surveillance of the test environment and identify all unintended RF sources.

SASY Site Alpha (SSA). This is a fixed site. It was used in conjunction with the mobile SASY, signal van Charlie (SVC), to provide monitoring of intended RF emissions from threats and the ECM responses from the ALQ-131. The site's antenna was slaved to the aircraft to capture reflections of the ground threat emissions off the test aircraft and ECM responses from the ALQ-131. The final utilization of SVC and SSA would be dependent on the geometry of the profile, the threat locations, and the site's ability to accurately monitor the desired RF signals. Because of limitations at SVC described below, SSA was the only site used after the third risk reduction mission to perform this function.

Signal Van Bravo (SVB). This is a mobile SASY van which was used to provide monitoring of the RF environment to identify extraneous emissions which were not part of the JADS test. It uses an omnidirectional antenna, a multiband RF distribution system and spectrum analyzers to perform this surveillance function. This site was not used after the second risk reduction mission. SVB was designed to monitor limited RF bands of interest. In this mode, SVB is acceptable for surveillance of nonintentional RF emissions. The JADS Electronic Warfare (EW) Test required that surveillance not be limited to a single SASY band. Revisit times to all frequencies of interest became too long for SVB to be of use. The ALR-69 radar warning receiver (RWR) on the test aircraft was used to perform the spectrum surveillance function for the test.

Signal Van Charlie (SVC). This is another mobile SASY van placed at different locations during risk reduction missions to determine the best location for monitoring the JADS scenario.

It was used in conjunction with SSA to provide monitoring of intended RF emissions from the threats and the ECM responses from the ALQ-131. The site's antenna was slaved to the aircraft to capture reflections of the ground threat emissions from the test aircraft and also ECM responses from the ALQ-131. The effective use of SVC is dependent on the geometry of the profile, the threat locations, and the sites ability to accurately monitor RF signals. This site was not used after the third risk reduction mission because it was unable to accurately track the test aircraft. The beam width of the SVC antenna was too narrow to be accurately pointed at the test aircraft using the Target Acquisition and Tracking System (TATS). Since the signals of interest could not be collected without pointing the antenna at the test aircraft, the decision was made to delete SVC from the test instrumentation prior to the start of open air range (OAR) baseline testing.

E1.2 Limitations

The SVC signal van element of SASY had a beam width that was too narrow to be accurately pointed at and consistently track the aircraft even using the TATS. Thus, the signals of interest could not be collected as required by this signal van and its use was terminated early in risk reduction. The pulse analyzer was unable to meet JADS measurement requirements for jammers activation and deactivation times for the following reasons.

- Because of collection limitations of the pulse analyzer, a pulse buffer snapshot approach was used to monitor three of the four threat emitters. The revisit time of the pulse analyzer site to begin a new snapshot collection was never less than 1 second. In addition, if an emitter's signal was weak, a pulse buffer collection would pause until the signal strength increased to an adequate level for triggering the pulse analyzer acquisition hardware. This would require the collection process to be canceled prior to starting a collection process for another emitter. This cancellation/restart process also increased the revisit time. Additional pulse analyzer's could have been used to provide a continuous stare capability. However, because of the second limitation presented below, these additional units would not have completely solved the problem.

- Because of the location of the SASY site and the geometry of the JADS flight profile, RF energy reflected from the aircraft was not always sufficient to provide a reliable source for measurement by the pulse analyzer. Unfortunately, the regions of the profile that caused the most problems were near the edges of the threat engagements which were the same regions where sites and jammer responses were activated and deactivated.

E2. Pulse, Network, and Spectrum Analyzers

E2.1 Description

Pulse Analyzer. A SciComm pulse analyzer was used to measure pulse parameters of threats and ALQ-131 jammer responses. This analyzer captures pulse buffers and time tags the time of arrival for each pulse in this buffer. In addition, frequency, amplitude and pulse width measurements are made for each pulse in the buffer. The time-tag source for the pulse analyzer is synchronized to

the range's universal time code (UTC). Since time-tags are available for each pulse in the history buffer, the pulse analyzer can be used to measure activation and deactivation times of threats and ALQ-131 ECM responses. The pulse analyzer does not have the capability to measure continuous wave (CW) emitter parameters. The measurement capabilities of the pulse analyzer are summarized below.

- Threat pulse characteristics
  - Pulse repetition interval (PRI) - 100 nanosecond (ns) resolution and accuracy
  - Pulse width - 100 ns resolution and accuracy
  - RF center frequency - 5 megahertz (MHz) resolution and accuracy
  - Scan period - 1 millisecond (ms) resolution; accuracy of two times the threat's maximum PRI
- ECM pulse characteristics
  - Technique wobulation period - 1 ms resolution; accuracy of 10% of the true period
  - Amplitude modulation (AM) duty cycle - 1% resolution; 10% accuracy
  - AM type
  - AM period - 1 ms resolution; accuracy of two times the threat's maximum PRI
- Measure activation times of emitters and ECM - 10 ms resolution and accuracy
- Measure deactivation times of emitters and ECM - 100 ms resolution and accuracy

Network Analyzer. The network analyzer provides a frequency versus time display that is video recorded for post-test analysis. It provides data about the extent of the doppler shift, the shape of the walk-off (i.e., linear versus parabolic), and the number of simultaneous false targets. The measurement capabilities of the network analyzer are summarized below.

- Pull-off frequency extents - 100 hertz (Hz) resolution and accuracy
- Pull-off period - 10 ms resolution and accuracy
- Hold time - 10 ms resolution and accuracy
- Technique period - 10 ms resolution and accuracy
- Technique activation time - 10 ms resolution and accuracy
- Technique deactivation time - 10 ms resolution and accuracy

Spectrum Analyzer. Spectrum analyzers at the SASY sites provided a real-time qualitative assessment of jammer responses and threat emissions. Their primary function was to assess the health of test assets during the mission to identify major problems that may be corrected quickly. The measurement requirement for the spectrum analyzers was to provide visual displays of emitter and ECM waveforms for real-time verification. Selected spectrum analyzer displays were recorded for post-test processing.

E2.2 Limitations

The network analyzer was able to provide the upper pull-off frequency limit but not at the required resolution and accuracy. The available resolution and accuracy was 1 kilohertz (kHz). The lower pull-off frequency limit could not be recovered because of limits in resolution of the display. The technique activation and deactivation times were measurable to 1 second resolution. However, due to the same limitations explained above for the pulse analyzer, these times were likely more inaccurate than 1 second. This inaccuracy was due to inadequate signal levels from the sites received and analyzed by the SASY over the entire flight profile used by JADS.

The spectrum analyzers were able to provide real-time qualitative verification of techniques for all JADS threats; however, because of limited threat signal strength reflected from the aircraft, verification of threat emissions was not possible over portions of the flight path.

E3. Threat Site Instrumentation

E3.1 Description

The threat sites were instrumented to provide information on operator switch positions, threat pedestal position, and certain missile flyout parameters. These items are discussed below.

Operator Switchology. This instrumentation provided information about a threat's operating mode during a test as well as when the mode was activated and deactivated. Switches and controls at the site are monitored by instrumentation which reports their state at a periodic rate. The switch states are recorded locally as well as transmitted, real time, back to a central recording and display facility. These data were then processed post-test to extract a time history of site activity during the mission. The switchology instrumentation was required to measure significant threat mode changes (i.e., dummy load/radiate, track mode, PRI, frequency, acquiring or tracking target, missile/weapon activity, and state of electronic counter-countermeasures [ECCM] techniques). In addition, these mode changes were time-tagged with UTC. The accuracy of these time-tags must be no worse than the track loop/scan interval of the threat system being instrumented.

Pedestal Position. Instrumentation at each site records the position of the threat pedestal in azimuth and elevation as well as the position of angle and range track gates where applicable. This information is recorded for post-test processing to determine the position of the target aircraft as perceived by the threat. Differences between perceived and real positions are expressed as tracking error. The measurement requirements for the tracked position instrumentation is as follows.

- Tracked position is provided from each site throughout the mission regardless of threat mode (including dummy load or off).
- Tracked angle position - resolution and accuracy of 25% of the threat's beam width.
- Tracked position is updated at the same rate as the switchology data described above.
- Tracked range position - resolution and accuracy better than the threat's range gate duration.

Missile Data. The real-time missile flyout models executed at each surface-to-air missile (SAM) site provided data for post-test determination of missile miss distance. Missile flyout data include missile position versus time. These data are then processed post-test with the true aircraft position to obtain a miss distance value for each missile fired. The measurement requirement for this instrumentation is a single miss distance value for each missile fired. The accuracy and resolution for missile miss distance must not be worse than twice the accuracy of the aircraft position data.

E3.2 Limitations

Range missile miss distance data were provided for the Simulated Air Defense System (SADS) III and the SADS VIII at the requested resolution in a database file format. No miss distance data were generated for the SADS VI. However, these data were generated by the Air Force Electronic Warfare Evaluation Simulator (AFEWES) simulation of the missile. Miss distance data were neither expected nor received for the Weapon Evaluation Simulated Threat (WEST) X because of the lack of a validated projectile flyout simulation.

E4. Radar Detection and Performance Analysis System (RDAPAS)

E4.1 Description

The RDAPAS instrumentation collects log video, detected intermediate frequency (IF) data, and automatic gain control (AGC) voltages from the SADS III, SADS VIII, and WEST X. Data provided by the RDAPAS also include calibration data which can be used to derive the threats absolute received power level from the target. These data may then be used to extract jammer-to-signal ratio (J/S) by taking advantage of the jammer's amplitude modulation technique waveform. The jammer uses an on/off modulation which results in received signals containing the target return only (S) and both the target return and jamming (J+S). These values can then be used to extract J/S. The measurement requirement for the RDAPAS is to provide absolute received signal levels with an accuracy better than 3 decibels (dB). The resolution is also required to be better than 3 dB. Measurements of received signal level are required during the entire threat engagement at an update interval no less than 25 ns.

E4.2 Limitations

There were limitations in the ability of RDAPAS to compute J/S in the range environment. These limitations were due to the instantaneous dynamic range of the radar receiver and the threat tracking performance. The measurement of the J/S was constrained by the instantaneous range of the threat radar receiver at the point where the RDAPAS is connected to the threat. If the true J/S exceeds the instantaneous dynamic range of the receiver, then the RDAPAS-derived J/S will be smaller than the true value. This result was because either the J+S measurement interval would drive the threat receiver into saturation (resulting in a smaller measured value for J+S) or the S measurement interval would be below the threat receiver's sensitivity (resulting in a larger measured value for S). Which of these conditions occurred depended on the state of the AGC;

however, either led to smaller computed J/S than actual. Also, during each of these situations, the actual J/S was relatively large. However, this inaccurate information was adequate for assessing the JADS test objectives related to J/S. The second constraint is related to the ability of the threat to track the target. The J/S computation was based upon receiving jamming and signal energy into the threat receiver. However, if the threat is not tracking the target correctly because of large angle track errors, then there will be no signal return or jammer response from the aircraft. But, during these intervals, J/S was no longer defined and was of no interest. Therefore, the second problem was self-curing.

JADS was unable to derive J/S values from the RDAPAS data during the range testing. This inability was due to tape formatting problems, lack of communication between the range and Georgia Tech Research Institute personnel, and RDAPAS failures during the mission. The RDAPAS tape was provided on a 4 millimeter digital audio tape. The software used by the range to generate this tape product had several problems that needed to be resolved before a standard tape product could be created. A second problem with the RDAPAS data product was related to the reliability of the RDAPAS systems at the threats. Three RDAPAS systems were scheduled for each risk reduction mission. However, no more than two RDAPAS systems were able to provide data on any single mission. As a result of all these problems and subsequent inability to calculate radar cross-section, the RDAPAS effort was terminated midway through the open air range baseline testing.

E5. Ground Track Reference Radar

E5.1 Description

The ground tracking reference radar provided a backup data source to the RAJPO position data and also provided a target position source used by the SASY and threat systems for antenna slaving. Reference radar can be merged with the RAJPO data after the mission using the time-space-position information (TSPI) Data Optimizing Processor (TDOP). The TDOP is designed to analyze multiple TSPI data inputs and select the best estimate of true target aircraft position. The ground tracking radar also provides a real-time position update of the target which is used as an input to the TATS which can be transmitted to remote threat sites. This information is then used by sites to point their antenna at the target aircraft. This is necessary to permit initial acquisition of the target by threat systems and to ensure that the SASY receives adequate signals from the aircraft throughout the mission. The measurement requirements for the ground tracking radar are as follows.

- Real-time data - target position data must be accurate enough to point threat and SASY antennas at the target aircraft during all parts of the flight profile.
- Post-test - target position data must have an accuracy and resolution no worse than the RAJPO positional data.

E5.2 Limitations

The real-time data from the reference radar were sufficient to accurately point antennas for the SADS III, SADS VI, and SSA. However, pointing angles were not sufficiently accurate to steer the antennas for the SADS VIII, WEST X, and SVC. The inability to accurately steer these sites was more likely the result of latencies and update rates of data transmissions from the reference site to the remote sites over the TATS system. The SADS VIII and WEST X had other equipment available that were used in conjunction with TATS to increase the accuracy of the pointing angles provided by the reference radar. The SVC was not used after the second risk reduction mission because of this limitation in pointing accuracy. The post-test data product did not meet the required measurement accuracy and therefore was not useful for JADS test objectives.